DZA | German Centre of Gerontology

January 2018

German Ageing Survey (DEAS):
Instruments of the Sixth Wave 2017

Heribert Engstler, Claudia Vogel, Anne Böger, Janna Franke, Daniela Klaus, Katharina Mahne, Julia Simonson, Svenja Spuling, Markus Wettstein, Julia K. Wolff, Ruta Daktariunaite, Clemens Tesch-Römer

German Centre of Gerontology
Deutsches Zentrum für Altersfragen (DZA)
Forschungsdatenzentrum (FDZ-DZA)
Manfred-von-Richthofen-Straße 2
12101 Berlin
Telefon +49 (0)30 – 26 07 40-0
Telefax +49 (0)30 – 78 54 350
E-Mail fdz@dza.de

CONTENTS

1	**CAPI-Template for the face-to-face interview**	**5**
	Preloads	7
	Registration of the proxy interview	10
	Family background and education	11
	Employment and transition to retirement	30
	Marital status and partnership	63
	Children and grandchildren	100
	Other relatives	117
	Household composition and housing	119
	Leisure activities and volunteering	132
	Health	150
	Pulmonary function test	169
	Personal network	171
	Social support	177
	Financial dealings and standard of living	185
	Willingness to participate in panel survey and digit-symbol test	198
	Addresses and moving plans	201
	Proxy questions	203
	Interviewer questions	206
2	**Drop-off questionnaire**	**213**
3	**Short questionnaire for non-respondents**	**249**
4	**Occupational status card**	**253**
5	**Cards with personal codes**	**257**
6	**Answer options (excerpt)**	**261**
7	**Digit-symbol test**	**265**
8	**Pulmonary function test**	**269**
9	**Synopses of CAPI modules**	**275**

1 CAPI-TEMPLATE FOR THE FACE-TO-FACE INTERVIEW

This is the revised version of the template prepared by the German Centre of Gerontology. The template was used to program the electronic questionnaire for the computer assisted personal interview (CAPI). The respondents were interviewed by trained interviewers usually in the respondents' home.

The CAPI-template makes use of preloads (D-variables). These are variables with panel respondents' information collected in earlier DEAS waves. They are used to filter the flow of questions. The main part are questions to be answered by the respondent (target person or proxy if the target person cannot perform the interview and consents to having a proxy interview). The latter part of the template contains questions regarding the interview and the respondents' home to be answered by the interviewer.

Questions which are not directed to all respondents contain filter instructions.

Abbrevations:

B	Baseline sample
P	Panel sample
ZP	Target person (respondent)
Px	Proxy
INT	Instruction to interviewer
Prog	Instruction to software programmer
mod.	Modified question (compared to wave 4)
RA	Residential area

Notes

Relavant to programming: only the output filter (not input filter) as well as changes in the questions

- **Coding of missing values**: The template was used to program the electronic questionnaire for the computer assisted personal interview (CAPI). The codes for missing information used for prgramming, deviate from the coding in the data set (scientific use file) as follows:
  - „declined“: 7,97,9997 etc. (in template) → -1 (in data set)
  - „Don’t know“: 8,98,9998 etc. (in tamplate) → -2 (in data set)

- **Everything relevant for filter guidance:** Blue font color

- **Identification of the questionnaires** (intended for users):
  - Questions to:
    - B = respondents basic survey
    - P = panel respondents
  - Respondent (target person) - or Proxy
    - ZP = interview with respondent (target person)
    - Px = Proxy interview

Preloads

Label	Content	Values
DStich	Sample	0: Panel sample 1: Baseline Sample
DYear	Current year of interview	year (2017 for all)
DLM	Date of last interview: month	month 1: January 2: February 3: March 4: April 5: May 6: June 7: July 8: August 9: September 10: October 11: November 12: December
DLJ	Date of last interview: year	year (1996, 2002, 2008, 2011, 2014)
DSex	Respondent’s sex	1: male 2: female 9: missing or inconsisent
DGeb	Respondent’s year of birth	1911 to 1974 9999: missing or inconsisent
Section 0: Family background (during childhood and youth)		
D01	Main caregiver 1	1: mother 2: father 3: stepmother 4: stepfather 5: foster mother / adoptive mother 6: foster father / adoptive father 7: grandmother 8: grandfather 9: another relative 10: another person 18: no main caregiver 1

		19: missing or inconsisent 20: respondent grown up in institution
D011	Sex main caregiver 1	0: male 1: female 9: missing 18: no main caregiver 20: respondent grown up in institution
D02	Main caregiver 2	1: mother 2: father 3: stepmother 4: stepfather 5: foster mother / adoptive mother 6: foster father / adoptive father 7: grandmother 8: grandfather 9: another relative 10: another person 18: no main caregiver 2 19: missing or inconsisent 20: respondent grown up in institution
D021	Sex main caregiver 2	0: male 1: female 9: missing 18: no main caregiver 2 20: respondent grown up in institution
D03	Vital status main caregiver 1	0: deceased 1: living 9: vital status missing or inconsisent 18: no main caregiver 2 20: respondent grown up in institution
D04	Vital status main caregiver 2	0: deceased 1: living 9: vital status missing or inconsisent 18: no main caregiver 2 20: respondent grown up in institution
D05	Number of main care givers	1: one 2: two 9: vital status missing or inconsisent 20: respondent grown up in institution
Section 200: Marital status and partnership		
D21	Partner	0: no 1: yes 9: missing
D22	Marriage/ same-sex union	0: no 1: yes 9: missing
D23	Married, living apart	0: no 1: yes 9: missing
D24	Retired or non-working partner 65+	0: no | missing | no partner 1 : yes

D26	female partner	0: male | missing | no partner 1: female
D27	Hetero relationship	0: no 1: yes | missing | no partner
Section 300: child and grandchild		
D311	Child 1: sex	1: male 2: female 9: missing
D312	Child 1: year of birth	year 9: missing
D313	Grandchild: child of child 1: sex	1: male 2: female 9: missing
D314	Grandchild: child of child 1: year of birth	year 9: missing
D321	Child 2: sex	1: male 2: female 9: missing
D322	Child 2: year of birth	year 9:missing
D323	Grandchild: child of child 2: sex	1: male 2: female 9: missing
D324	Grandchild: child of child 2: year of birth	year 9:missing
D331	Child 3: sex	1: male 2: female 9: missing
D332	Child 3: year of birth	year 9:missing
D333	Grandchild: child of child 3: sex	1: male 2: female 9: missing
D334	Grandchild: child of child 3: year of birth	year 9:missing
D341	Child 4: sex	1: male 2: female 9: missing
D342	Child 4: year of birth	year 9:missing
D343	Grandchild: child of child 4: sex	1: male 2: female 9: missing
D344	Grandchild: child of child 4: year of birth	year 9:missing

	RECORDING OF PROXY INTERVIEWS IN IN THE CONTACT PROTOCOL	
EKP 1 (P) (ZP/Px)	DStich=0 [Panel sample] INT: For those who are unable to conduct the interview alone for health reasons, there is the possibility to be supported by a proxy and to answer a shorter questionnaire. Please note: proxy interviews may only be conducted if ... a) the respondent can not perform the interview himself for health reasons; and b) personally approves the proxy's interview; and c) names the person, who performs the interview with him/her or can represent him/her. You are allowed only clarify the following facts in person directly or on the telephone with Mr / Mrs <NAME TP>. **Mr / Mrs <NAME TP> itself told me that** 1: he / she agrees to conduct the interview together with a proxy 2: he / she agrees that the interview is conducted only with the proxy, without Mr / Mrs <NAME TP> being present. --- 3: he / she does not agree that a proxy interview is conducted. 4: can not be clarified **Generate auxiliary variable:** Proxy: Proxy- or TP-Interview (0=TP, 1=Proxy, 2=Proxy & TP) 0 if EKP1= 3 | 4 1 if EKP1=2 2 if EKP1=1	EKP2 --- End
2EKP2 (P) (Px)	INT: Please indicate whether the respondent is to be reached at the same address as the target person. 1: respondent is available at the same address as TP --- 2: respondent is available at a different address, and it is… --- 3: could not be clarified yet	End --- EKP3 --- End
EKP3 (P) (Px)	EKP2=1 | 2 INT: Please note the name and address of the respondent.. Address: Addresstool	End

Nr.	FAMILY BACKGROUND AND EDUCATION (DURING CHILDHOOD AND YOUTH)	Continue with
	Note for infas: Please code the missing values in the delivered dataset: (-1) declined (-2) don't know	
	Record interview number **Record interview date** **Record serial number**	
1px1 (P) (Px)	Proxy>0 [Proxy] PROG: all red INT: You have specified in the contact protocol that for health reasons the target person wishes that a proxy interview would be conducted, and it is PROG: Proxy=1: only with a proxy WITHOUT the target person. PROG: Proxy=2: with the target person AND a proxy together. For the control of the interview, it is essential that you confirm the information provided at the beginning of the interview again. If something has changed, please enter the appropriate code. 1: With the target person according to address sheet, WITHOUT support of a proxy --- 2: Only with a proxy WITHOUT the target person 3: With a proxy AND the target person PROG: overwrite auxiliary variable proxy (0=TP, 1=Proxy, 2=Proxy & TP) Proxy=0 IF 1px1=1 Proxy=1 IF 1px1=2 Proxy=2 IF 1px1=3	1a --- 1px2
1px2 (P) (Px)	PROG: all red INT: I confirm: For health reasons the interview can not be conducted alone with the target person **and the target person himself/herself has confirmed to me** that the interview ... 1: can be conducted together with the target person AND a proxy 2: can be conducted only with a respresentative, WITHOUT the target person --- 3: The target person does not agree (any more) that a proxy interview would be conducted. PROG: overwrite auxiliary variable proxy (0=TP, 1=Proxy, 2=Proxy & TP) Proxy=0 IF 1px2=3 Proxy=1 IF 1px2=2 Proxy=2 IF 1px2=1	1a --- End (Rcode xx)
1a (B/P) (ZP/Px)	**Firstly, many thanks for willingness to take part in this survey. May I now start with the interview?** 1: Yes DStich=0 [Panel sample] & Proxy=0 [TP] --- DStich=0 [Panel sample] & Proxy>0 [Proxy] --- DStich=1 [Baseline sample] --- 2: No	1b --- 1px5 --- 1 --- 1p3

1px5 (P) (Px)	DStich=0 [Panel sample] & 1a=1Proxy>0 [Proxy] INT: Before starting the interview please read the following: PROG: DStich=0 [Panel sample] & Proxy=2 [Proxy & TP]: **Mr / Ms [**<NAME TP>**] has already participated in our study.** INT: Addressed to the respondent: **You already participated in our study. Some questions that I will ask you in the course of this interview may be familiar to you. Repeated query of certain facts are important to be able to map changes in your living situation.** INT: Addressed to a proxy: **Thank you, that you support Mr / Ms [**<NAME TP>**]. The following questions are formulated in such a way that they are addressed to Mr / Mrs [**<NAME TP>**]** **So, if I ask you to tell me your date of birth, I do not mean your own date of birth, but that of Mr / Ms [**<NAME TP>**].** --- PROG: DStich=0 [Panel sample] & Proxy=1 [only Proxy] INT: Addressed to a proxy: **Thank you for your willingness to answer some questions for Mr / Mrs [Name TP]. The following questions are formulated in such a way that they are addressed to Mr / Ms [NAME TP]. Please answer the questions from the perspective of Mr / Mrs [NAME TP].** **So, if I ask you to tell me your date of birth, I do not mean your own date of birth, but that of Mr / Ms [**NAME TP**].**	1
1b (P) (ZP)	DStich=0 [Panel sample] & Proxy=0 [TP] & 1a=1 [willingness participation) INT: Please read out the following before the interview starts: **You already participated in our study. Some questions that I will ask you in the course of this interview may be familiar to you. Repeated interrogation of certain facts are important to map changes in your living situation.**	
	PROG: Timestamp	
1 (B/P) (ZP/Px)	1a=1 [willingness participation] INT: Do not ask respondent this question! **Sex of respondent** [PROG: Proxy>0] – NOT proxy‘s! 1: Male 2: Female --- DStich=0 [Panel sample] & DSex≠9 & DSex≠Question 1 --- All other	--- 1p1 --- 2
1p1 (P) (ZP/Px)	DStich=0 [Panel sample] & DSex≠9 & DSex≠Question 1 PROG: Proxy>0 [Proxy]: INT: Sex "[specification from question 1]" does not correspond to the specification from the last interview. Please check if you speak with the proxy of the right respondent! PROG: Proxy=0 [TP]: INT: Sex [according to Question 1] doesn’t fit with the information of the last interview. Please check, if you are speaking with the right respondent!	

	1: The recorded sex is proved and right --- 2: The recorded sex has to be corrected --- 3: It's not the right respondent	2 --- 1 --- 1p3
2 (B/P) (ZP/Px)	Please start by giving me your date of birth. INT: interview can only be carried out if there is at least one statement on birth year. If the respondent doesn't want to obtain a statement on birth year, please read out the following (PROG: green): **'It is very important that you give me your year of birth for the further interview. Many questions are guided by the year of birth. I sincerely ask you to give me your date of birth so that I can ask you only those questions that apply to your age.'** Day: _ _ Month: _ _ Year: _ _ _ _ 97: Declined 97: Declined 9997: Declined 98: Don't know 98: Don't know 9998: Don't know PROG: Generate variable <complete age> =Month of interview & -year - Question 2 Month & Year. If question 2 contains only year = year of interview – year of bith. PROG: DStich=0: year of birth must not be bigger than 1974 and not smaller than 1911 PROG: DStich=1: year of birth must not be bigger than 1974 and not smaller than 1929 --- Year in Question 2=9997|9998 [missing] --- DStich=0 [Panel sample] & year specification in DGeb≠9999 & Year in Question 2≠DGeb --- DStich=0 [Panel sample] & Proxy>0 [Proxy] & year specification in DGeb≠9999 & Year in Question 2=DGeb --- DStich=0 [Panel sample] & Proxy>0 [Proxy] & year specification in DGeb=9999 --- All other	--- 1p4 --- 1p2 --- 100px --- 100px --- 2a
1p4 (B/P) (ZP/Px)	Year in Question 2=9997|9998 **I'm sorry. Without the information about your year of birth I am not able to continue with the interview. I hope you have a nice day.** INT: Terminate the interview now and code the right code.	 End
1p2 (P) (ZP/Px)	DStich=0 [Panel sample] & Year in DGeb≠9999 & Year in Question 2≠DGeb PROG: DStich=0 [Panel sample] & Proxy=0 [TP]: INT: The stated year of birth doesn't fit to the available information. Please prove if you are speaking with the right respondent. If necessary, ask if you noticed the right year of birth. PROG: DStich=0 [Panel sample] & Proxy>0 [Proxy]: INT: The stated year of birth doesn't fit to the available information. Please prove if you are speaking with the proxy about the right respondent. If necessary, ask if you noticed the right year of birth. 1: The recorded year of birth is proved and right DStich=0 [Panel sample] & Proxy=0 [TP] --- DStich=0 [Panel sample] & Proxy>0 [Proxy] ---	 2a --- 100px ---

	2: The recorded year of birth has to be corrected --- 3: It's not the right respondent	2 --- 1p3
1p3 (B/P) (ZP/Px)	1a=2 | 1p1=3 | 1p2=3 PROG: Text in red INT: If you don't speak with the right respondent: Ask for the right respondent. If you can identify the right respondent, start the interview by the beginning. In other cases: Say goodbye to your conversational partner. Terminate the interview and enter the right code.	
2a (B/P) (ZP)	DStich=1 [Baseline sample] | (DStich=0 [Panel sample] & Proxy=0 [TP]) **Forget your actual age for a moment:** **How old do you <u>feel</u>, if you had to express it in years?** _ _ _ years 997: Declined 998: Don't know DStich=1 [Baseline sample] --- DStich=0 [Panel sample] & D05=20 [respondent grew up in an institution] --- DStich=0 [Panel sample] & D05=9 [Information of Main caregiver is missing or inconsisend] --- DStich=0 [Panel sample] & D05=1 & D03=1|9 [one main caregiver, alive or unknown| inconsisend] → first main caregiver --- DStich=0 [Panel sample] & D05=1 & D03=0 [one main caregiver, deceased] --- DStich=0 [Panel sample] & D05=2 & D03=1|9 [two main caregivers, first alive or unknown|inconsisend] → first main caregiver --- DStich=0 [Panel sample] & D05=2 & D03=0 & D04=1|9 [two main caregivers, first deceased, second alive or unknown|inconsisend] → second main caregiver --- DStich=0 [Panel sample] & D05=2 & D03=0 & D04=0 [two main caregivers, both deceased]	 2b --- 32a --- 3 --- 10 --- 32a --- 10 --- 10 --- 32a
2b (B) (ZP/Px)	DStich=1 [Baseline sample] **If you think back to your childhood up to the age of 16: Did you grow up living with siblings? Meant are both biological and stepsiblings.** 1: Yes, grown up with siblings 2: No, grown up without siblings 7: Declined 8: Don't know	
3 (B/P) (ZP)	DStich=1 [Baseline sample] | (DStich=0 [Panel sample] & Proxy=0 [TP] & 10_95=1 [negative preload]) | (DStich=0 [Panel sample] & Proxy=0 [TP] & D05=9 [Information of main caregiver missing or inconsisend]) (DStich=0 & D05=9) | (10_95=1): **If you think back to your childhood up to the age of 16:**	

	(All): **Did you grow up living with both biological parents for all or most of this period, that is, with both your biological mother and your biological father?** INT: Please read options aloud! One response only! 1: Yes, I grew up living with both biological parents for my entire childhood up to the age of 16 2: Yes, I grew up living with both biological parents for most of my childhood up to the age of 16 --- 3: No, I grew up living with just one of my biological parents up to the age of 16 4: No, I grew up living with other person --- 7: Declined 8: Don't know DStich=1 [Baseline sample] --- DStich=0 [Panel sample]	7 --- 4 --- 25a --- 32a
4 (B/P) (ZP)	(DStich=1 [Baseline sample] & 3=3|4 [grew up with only one parent or with other person]) | (DStich=0 [Panel sample] & Proxy=0 [TP] & D05=9 [information of main caregiver missing or inconsisend] & 3=3|4 [grew up with only one parent or with other person]) | (DStich=0 [Panel sample] & Proxy=0 [TP] & 10_95=1 [negated preload] & 3=3|4 [grew up with one parent or with other person]) **Who did you live with for all or most of this period?** INT: Show list 4! A maximum of 2 person should be selected; this is to identify the two main caregivers! If the respondent chooses an open (J-M), so statements like 'with uncle and aunt' have to be noted as to person! PROG: allow max. two answers PROG: If question 3=3, than not possible at question 4 to name no biological parents PROG: If question 3=4, than not possible at question 4 to name neither "biological mother" nor "biological father". PROG: if question 3=1|2, than quote letter A or B for main caregiver. Code N: "Grew up in an institution" must not be used with other codes 1: mentioned 0: not mentioned 7: declined 8: don't know A: Biological mother B: Biological father C: Stepmother D: Stepfather E: Foster mother / adoptive mother F: Foster father / adoptive father G: Grandmother H: Grandfather J: Other relatives (1) please specify: _____ (open, Length 40) K: Other relatives (2) please specify: _____ (open, Length 40) L: Other person (1) please specify: _____ (open, Length 40)	

	M: Other person (2) please specify: _____ (open, Length 40) ---------- N: Grew up in an institution DStich=1 [Baseline sample] ---------- DStich=0 [Panel sample]	 ---------- 25a ---------- 32a
5	Omitted.	
6	Omitted.	

PROG	programming instruction
	
	PROG:
	if question 3=1|2:
	person designation
	person1= mother (code letter A)
	person designation
	person2= father (code letter B)
	→ question 7 to 18b first for person 1, than for person 2
	---------- 	
	if question 3=3|4:
	person designation person 1=first person designation from question 4 (code letter from question 4)
	person designation person 2=second person designation from question 4
	(code letter from question 4)
	→ question 7 to 18b first for person 1, than- if second person in question 4 is mentioned- for person 2	

7 (B/P) (ZP)	{begin loop} (DStich=1 [Baseline sample] & (3=1|2 [grew up with parents]| (3=3| 4 [grew up with others] & 4≠N [not grew up in an institution]) | (DStich=0 [Panel sample] & Proxy=0 [TP] & D05=9 [information for main caregiver missing or inconsisend] & 3=3|4 [grew up with only one parent or with other person] & 4≠N [not grew up in an institution]) | (DStich=0 [Panel sample] & Proxy=0 [TP] & 10_95=1 [negative preload] & 3=3|4 [grew up with only one parent or with other person] & 4≠N [not grew up in an institution]) INT: Please enter the person's [Question 4] sex! Ask if necessary. 1: Male 2: Female 7: Declined 8: Don't know	
8 (B/P) (ZP)	(DStich=1 [Baseline sample] & (3=1| 2 [grew up with parents]| (3=3| 4 [grew up with others] & 4≠N [not grew up in an institution]))) | (DStich=0 [Panel sample] & Proxy=0 [TP] & D05=9 [information for main caregiver missing or inconsisend] & 3=3|4 [grew up with only one parent or with other person] & 4≠N [not grew up in an institution]) | (DStich=0 [Panel sample] & Proxy=0 [TP] & 10_95=1 [negative preload] & 3=3|4 [grew up with only one parent or with other person] & 4≠N [not grew up in an institution]) **What year was your [person code question 4] born?** PROG: Years of birth of (biological) parents must not be bigger than the years of birth of respondent PROG: Maximum value of year is 2017	

	Year of birth: _ _ _ _ 9997: Declined 9998: Don't know	
8a (B/P) (ZP)	(DStich=1 [Baseline sample] & (3=1|2 [grew up with parents]|(3=3|4 [grew up with others] & 4≠N [not grew up in an institution]) | (DStich=0 [Panel sample] & Proxy=0 [TP] & D05=9 [information for main caregiver missing or inconsisend] & 3=3|4 [grew up with only one parent or with other person]) & 4≠N [not grew up in an institution]) | (DStich=0 [Panel sample] & Proxy=0 [TP] & 10_95=1 [negative preload] & 3=3|4 [grew up with only one parent or with other person] & 4≠N [not grew up in an institution]) **Where was your [person code question 4] born?** 1: within the territory of present-day Germany, including both the former East and West German Laender 2: in Germany´s former eastern territories 3: elsewhere in Europe 4: or outside Europe? 7: Declined 8: Don't know	
9	omitted	
10 (B/P) (ZP)	(DStich=1 [Baseline sample] & (3=1|2 [grew up with parents]|(3=3|4 [grew up with others] & 4≠N [not grew up in an institution]))) | (DStich=0 [Panel sample] & Proxy=0 [TP] & D05=9 [information for main caregiver missing or inconsisend] & 4≠N [not grew up in an institution]) | (DStich=0 [Panel sample] & Proxy=0 [TP] & 10_95=1 [negative preload] & 4≠N [not grew up in an institution]) | (DStich=0 [Panel sample] & Proxy=0 [TP] & (D03|D04=1 [main caregiver was alive at last survey] | D03|D04=9 [vital status of main caregiver unknown])) (DStich=0 [Panel sample] & Proxy=0 [TP] & D05=1|2 & D01<=6 & 1. main caregiver): **Let's talk about your parents.** (DStich=0 [Panel sample] & Proxy=0 [TP] & D05=1|2 & D01>=7 & 1. main caregiver): **Let's talk about the person with whom you grow up**. (All): **Is your [person code question 4]** [DStich=0 [Panel sample] & Proxy=0 [TP] & D05=1|2: **with whom you grow up] still living today?** PROG: DStich=0 [Panel sample] & Proxy=0 [TP] & D05=1|2: form of Address „[Ihr/Ihre]" according to preloads: person Designation person 1=D01, sex Person 1=D011; person Designation Person 2=D02, sex Person 2=D021 (this statement please analogous in the following Questionn 10a-17a) 1: yes --- 2: no --- 7: declined (DStich=1 [Baseline sample] | D05=9 [information for main caregiver missing|inconsisend] | 10_95=1 [negative preload]) & ((3=1|2) | (4=second main caregiver)) → first main caregiver ---	12a --- 10a --- 7 ---

	DStich=1 [Baseline sample] & ((3=1|2) | (no second main caregiver))	25a
	(D05=9 [information for main caregiver missing|inconsisend] |10_95=1 [negative preload]) & (3=1|2) | (no second main caregiver))	32a
	DStich=0 [Panel sample] & D05=1 [one main caregiver]	32a
	DStich=0 [Panel sample] & D05=2 & D04=1|9 [two main caregiver, second alive or Unknown|inconsisend] → second main caregiver	10
	DStich=0 [Panel sample] & D05=2 and D04=0 [two main caregivers, second deceased]	32a
	8: don't know (DStich=1 [Baseline sample] | D05=9 [information for main caregiver missing|inconsisend] | 10_95=1 [negative preload])	18
	DStich=0 [Panel sample]	32a
	DStich=0 [Panel sample] & D05=1|2 Button: 95: Respondent denies the displayed person label of the preload **PROG: generate auxiliary variable** 10_95 [negative preload]=1 if: 10=95	3
10a (B/P) (ZP)	(DStich=1 [Baseline sample] & (3=1 | 2 [grew up with parents] | (3=3 | 4 [grew up with others] & 4≠N [not grew up in an institution])) & 10=2 [main caregiver deceased]) | ((DStich=0 [Panel sample] & Proxy=0 [TP] & D05=9 [information for main caregiver missing or inconsisend] & 4≠N [not grew up in an institution]) | (DStich=0 [Panel sample] & Proxy=0 [TP] & 10_95=1 [negative preload] & 4≠N [not grew up in an institution]) | (DStich=0 [Panel sample] & Proxy=0 [TP] & (D03|D04=1 [main caregiver was alive at last survey] | D03|D04=9 [vital status of main caregiver unknown])) & 10=2 [main caregiver deceased]) **What year did your [person code question 4] die?** PROG: year of death must not be smaller than year of birth of respondent PROG: max. allowed value of year = 2017 Year of death: _ _ _ _ 9997: Declined 9998: Don't know	
	(DStich=1 [Baseline sample] | D05=9 [information for main caregiver missing|inconsisend] | 10_95=1 [negative preload]) & (4=second main caregiver) → second main caregiver	7
	(DStich=1 [Baseline sample] | D05=9 [information for main caregiver missing|inconsisend] | 10_95=1 [negative preload]) & (4=no second main caregiver)	25a
	DStich=0 [Panel sample] & D05=1	32a
	DStich=0 [Panel sample] & D05=2 & D04=1|9 → second main caregiver	10
	DStich=0 [Panel sample] & D05=2 & D04=0	32a
11	Omitted.	
11a	Omitted.	
12	Omitted.	

12a (B/P) (ZP)	(DStich=1 [Baseline sample] & (3=1 | 2 [grew up with parents] | (3=3 | 4 [grew up with others] & 4≠N [not grew up in an institution])) & 10=1 [main caregiver alive]) | ((DStich=0 [Panel sample] & Proxy=0 [TP] & D05=9 [information for main caregiver missing or inconsisend] & 4≠N [not grew up in an institution]) | (DStich=0 [Panel sample] & Proxy=0 [TP] & 10_95=1 [negative preload] & 4≠N [not grew up in an institution]) | (DStich=0 [Panel sample] & Proxy=0 [TP] & (D03|D04=1 [main caregiver was alive at last survey] | D03|D04=9 [vital status of main caregiver unknown])) & 10=1 [main caregiver alive]) **Does your [person code question 4] live in your house or household?** 1: Yes --- 2: No --- 7: Declined 8: Don't know	13 --- 12b --- 13
12b (B/P) (ZP)	(DStich=1 [Baseline sample] & (3=1 | 2 [grew up with parents] | (3=3 | 4 [grew up with others] & 4≠N [not grew up in an institution])) & 10=1 [main caregiver alive] & 12a=2 [don't live in own household]) | ((DStich=0 [Panel sample] & Proxy=0 [TP] & D05=9 [information for main caregiver missing or inconsisend] & 4≠N [not grew up in an institution]) | (DStich=0 [Panel sample] & Proxy=0 [TP] & 10_95=1 [negative preload] & 4≠N [not grew up in an institution]) | (DStich=0 [Panel sample] & Proxy=0 [TP] & (D03|D04=1 [main caregiver was alive at last survey] | D03|D04=9 [vital status of main caregiver unknown])) & 10=1 [main caregiver alive] & 12a=2 [don't live in own household]) **How far away does your [person code question 4] live from you at the moment?** INT: Show Blue list B! 1: In the neighbourhood 2: In the same town 3: In another town, but it can be reached within two hours 4: Farther away, in Germany 5: Farther away, abroad 7: Declined 8: Don't know	
13 (B/P) (ZP)	(DStich=1 [Baseline sample] & (3=1 | 2 [grew up with parents] | (3=3 | 4 [grew up with others] & 4≠N [not grew up in an institution])) & 10=1 [main caregiver alive]) | ((DStich=0 [Panel sample] & Proxy=0 [TP] & D05=9 [information for main caregiver missing or inconsisend] & 4≠N [not grew up in an institution]) | (DStich=0 [Panel sample] & Proxy=0 [TP] &10_95=1 [negative preload] & 4≠N [not grew up in an institution]) | (DStich=0 [Panel sample] & Proxy=0 [TP] & (D03|D04=1 [main caregiver was alive at last survey] | D03|D04=9 [vital status of main caregiver unknown])) & 10=1 [main caregiver alive]) **How often are you in contact with your [display person label] (i.e. visits, letters, or phone calls, SMS or e-mail)?** INT: Show Blue list A! 1: Daily 2: Several times a week 3: Once a week	

	4: Between 1-3 times per month 5: Several times a year 6: Less often 7: Never 97: Declined 98: Don't know	
14	Omitted.	
15	Omitted.	
16	Omitted.	
17 (B/P) (ZP)	(DStich=1 [Baseline sample] & (3=1 | 2 [grew up with parents] | (3=3 | 4 [grew up with others] & 4≠N [not grew up in an institution])) & 10=1 [main caregiver alive]) | ((DStich=0 [Panel sample] & Proxy=0 [TP] & D05=9 [information for main caregiver missing or inconsisend] & 4≠N [not grew up in an institution]) | (DStich=0 [Panel sample] & Proxy=0 [TP] &10_95=1 [negative preload] & 4≠N [not grew up in an institution]) | (DStich=0 [Panel sample] & Proxy=0 [TP] & (D03|D04=1 [main caregiver was alive at last survey] | D03|D04=9 [vital status of main caregiver unknown])) & 10=1 [main caregiver alive]) **How close is your relationship to your [person code question 4] today?** INT: Show Blue list C! 1: Very close 2: Close 3: Morately close 4: Not very close 5: Not at all close 7: Declined 8: Don't know	
17a1 (B/P) (ZP)	(DStich=1 [Baseline sample] & (3=1 | 2 [grew up with parents] | (3=3 | 4 [grew up with others] & 4≠N [not grew up in an institution])) & 10=1 [main caregiver alive]) | ((DStich=0 [Panel sample] & Proxy=0 [TP] & D05=9 [information for main caregiver missing or inconsisend] & 4≠N [[not grew up in an institution]) | (DStich=0 [Panel sample] & Proxy=0 [TP] &10_95=1 [negative preload] & 4≠N [not grew up in an institution]) | (DStich=0 [Panel sample] & Proxy=0 [TP] & (D03|D04=1 [main caregiver was alive at last survey] | D03|D04=9 [vital status of main caregiver unknown])) & 10=1 [main caregiver alive]) **How often are you and your [designation of person in question 4] annoyed or angry with each other** INT: provide blue list D! 1: Never 2: Seldom 3: Sometimes 4: Often 5: Always 7: Declined 8: Don't know	

17a (B/P) (ZP)	(DStich=1 [Baseline sample] & (3=1 | 2 [grew up with parents] | (3=3 | 4 [grew up with others] & 4≠N [not grew up in an institution])) & 10=1 [main caregiver alive]) | ((DStich=0 [Panel sample] & Proxy=0 [TP] & D05=9 [information for main caregiver missing or inconsisend] & 4≠N [not grew up in an institution]) | (DStich=0 [Panel sample] & Proxy=0 [TP] &10_95=1 [negative preload] & 4≠N [not grew up in an institution]) | (DStich=0 [Panel sample] & Proxy=0 [TP] & (D03|D04=1 [main caregiver was alive at last survey] | D03|D04=9 [vital status of main caregiver unknown])) & 10=1 [main caregiver alive]) **Is your <display person label> now mainly:** INT: Please read options aloud! 1: Employed 2: Unemployed 3: Retired or in early retirement 4: Homemaker (PROG: Specification depending on gender in question) 5: Other (*please note*): 7: Declined 8: Don't know DStich=1 [Baseline sample] --- DStich=0 [Panel sample] & (D05=9 [information for main caregiver missing | inconsisend] | 10_95=1 [negative preload]) & (4=second main caregiver) → second main caregiver --- DStich=0 [Panel sample] & (D05=9 [information for main caregiver missing | inconsisend] | 10_95=1 [negative preload]) & (4=no second main caregiver) --- DStich=0 [Panel sample] & D05=1 --- DStich=0 [Panel sample] & D05=2 & D04=1|9 → second main caregiver --- DStich=0 [Panel sample] & D05=2 & (in Question 4= second main caregiver already) --- DStich=0 [Panel sample] & D05=2 & D04=0	 18 --- 7 --- 32a --- 32a --- 10 --- 32a --- 32a
18 (B) (ZP)	(DStich=1 [Baseline sample] & (3=1 | 2 [grew up with parents] | (3=3 | 4 [grew up with others] & 4≠N [not grew up in an institution])) & 10=1|8 [main caregiver alive or Don't know]) What [was /is] your [designation of person in question 4] s main occupation? Please give me the relevant code number. INT: Show Blue Card! PROG: allow only valid codes (analogous blue card and answer option above). Code number:_ _ --- 1: Never employed (3=1|2) | (in Question 4=second main caregiver) → second main caregiver --- (3=1|2) | (in Question 4= no second main caregiver) --- 2: Was mainly a homemaker 97: Declined 98: Don't know	 18b --- 7 --- 25a --- 18b

18a	Entfällt	
18b (B) (ZP)	{end loop} (DStich=1 [Baseline sample] & (3=1 | 2 [grew up with parents] | (3=3 | 4 [grew up with others] & 4≠N [not grew up in an institution]) & 10=1|8 [main caregiver alive or Don't know]) & 18≠01 [main caregiver was not never employed]) And in which occupational status was your [designation of person in question 4] when you were 16 years old? Please give me the relevant code number. INT: Show Blue Card! PROG: allow only valid codes (analogous blue card and answer option above) Code number:_ _ 2: Was mainly a homemaker 97: Declined 98: Don't know --- (DStich=1 [Baseline sample]) & ((3=1|2) | (in Question 4=second main caregiver)) → second main caregiver --- (DStich=1 [Baseline sample]) & ((3=1|2) | (in Question 4=no second main caregiver))	--- 7 --- 25a
19	Omitted.	
19a	Omitted.	
20	Omitted.	
21	Omitted.	
22	Omitted.	
23	Omitted.	
24	Omitted.	
25	Displaced to 27a.	
	PROG: timestamp	
25a (B) (ZP)	DStich=1 [Baseline sample] **Now to your place of birth: Where were you born?** INT: Please read out examples! 1: within the territory of present-day Germany, including both the former East and West German Laender --- 2: in Germany´s former eastern territories 3: elsewhere in Europe 4: or outside Europe? 7: Declined 8: Don't know	25c --- 25b
25b (B) (ZP)	DStich=1 [Baseline sample] & 25a≠1 [NOT born in Germany] **Since when have you been living in Germany (both East and West)?** PROG: designation of year must not be smaller than year of birth of respondent. PROG: maximal value of year is 2017 Since year _ _ _ _ 9996: since I was born 9997: Declined 9998: Don't know	

25c (B) (ZP)	DStich=1 [Baseline sample] **Thinking back to your childhood up to the age of 16: What was the sole or main country you grew up in?** INT: One response only! 1: In East Germany (former GDR) 2: In West Germany or West Berlin 3: In Germany´s former eastern territories 4: In another country (show lis of countries): _____ 97: Declined 98: Don't know Year in Question 2 [Year of birth]<1958 --- Year in Question 2 [Year of birth]>=1958	 25d --- 25e
25d (B) (ZP)	DStich=1 [Baseline sample] & Year in Question 2 [Year of birth]<1958 **It is possible to have lived in several countries. So I would like to ask: between 1949 and 1990 did you live mainly in East Germany (GDR), West Germany (FRG), or outside Germany?** 1: East Germany (GDR), including East Berlin 2: West Germany (FRG), including West Berlin 3: Outside Germany 7: Declined 8: Don't know	
25e (B) (ZP)	DStich=1 [Baseline sample] **What is your country of citizenship? If you hold citizenship of multiple countries, please name them all.** INT: Multiple responses possible! PROG: allow multiple choice. PROG: code K must not be named with other codes A: Germany B: Austria C: Italy D: Poland E: Turkey F: USA G: States of former Yugoslavia H: States of former Soviet Union I: Rumania J: Other country (please name): _____ K: None, I am stateless 1: mentioned 0: not mentioned DStich=1 [Baseline sample] & 25e=A [german nationality] --- DStich=1 [Baseline sample] & 25e≠A [no german nationality or no nationality]	

	--- 7: declined 8: don't know DStich=1 [Baseline sample] & 25e=7|8 [nationality missing]	--- 26
PROG	Entfällt	
25f (B) (ZP)	DStich=1 [Baseline sample] & 25e=A [german nationality] **How long have you had German citizenship?** PROG: designation of year must not be smaller than year of birth of target subject (Question 2) PROG: maximal value of year is 2017 Year: _ _ _ _ 9996: Since I was born 9997: Declined 9998: Don't know	
26 (B) (ZP)	DStich=1 [Baseline sample] **Now I would like to talk about your schooling and vocationaleducation/training.** **What country did you last attend school in?** **Was it…** INT: Please read out options 1-4! 1: in one of the states (Laender) of the former Federal Republic of Germany (West Germany) incl. West Berlin 2: in the former German Democratic Republic incl. East Berlin (East Germany) 3: in one of the formerly (pre-WWII) Eastern territories of Germany --- 4: or in another country? --- 6: did not attend school --- 7: Declined 8: Don't know	 27 --- 27a --- 29 --- 27a
27 (B) (ZP)	DStich=1 [Baseline sample] & 26=1|2|3 [last school attendance in BRD, DDR or former german eastarea] **With the aid of this list, please tell me the highest level of school leaving qualification you have.** INT: Show list 27! One response only! A: Special Needs School B: Lower Secondary School (Hauptschule, Volksschule) C: Intermediate Secondary School (Realschule, Lyzeum) D: Polytechnic Secondary School, 8th Grade E: Polytechnic Secondary School, 10th Grade F: Qualification for Applied Upper Secondary Studies (Fachhochschulreife) G: Upper Secondary School (Gymnasium / Extended Upper School / Vocational School with Abitur Exam) H: Other (please note):_____ J: Did not attain any school-leaving certificate	

	97: Declined 98: Don’t know	29
27a (B) (ZP)	DStich=1 [Baseline sample] & 26=4|7|8 [school attendance in other country or missing] **How many years did you attend school?** PROG: schooltime must not be longer than age Years _ _ _ 997: Declined 998: Don’t know --- 995: did not attend school	 28 --- 29
28 (B) (ZP)	DStich=1 [Baseline sample] & 26=4|7|8 [school attendance in other country or missing] & 27a≠995 [go to school or missing] **What kind of certificate did you obtain upon completion of school? Did you...** INT: Please read out examples! 1: leave school without obtaining a school-leaving certificate 2: complete compulsory schooling with a school-leaving certificate 3: or complete further secondary education with a school-leaving certificate? 7: Declined 8: Don’t know	
29 (B) (ZP)	DStich=1 [Baseline sample] **Have you andergone vocational training or attended higher education in Germany?** INT: Show list 29! One response only! 1: Yes, only in Germany (including the former German Democratic Republic (East Germany) and the Federal Republic of Germany (former West Germany)) 2: Yes, in Germany and in another country --- 3: No, in a country other than Germany --- 4: No vocational training or higher education 7: Declined 8: Don’t know	 30 --- 31 --- 32
30 (B) (ZP)	DStich=1 [Baseline sample] & 29=1|2 [vocational training and studies in D] **What is the highest level of vocational education/training you have completed?** INT: Show list 30! One response only! A: Semi-skilled worker training B: Apprenticeship C: Full-time vocational school (Berufsfachschule, Handelsschule) D: Trade or technical school for vocational education (Meiserschule, Technikerschule, etc.) E: University of Applied Sciences (Fachhochschule) F: University, Technical University, other institution of higher education G: Other completed education/training (please note):	

	H: No completed vocational education/training 97: Declined 98: Don't know	 32
31 (B) (ZP)	DStich=1 [Baseline sample] & 29=3 [vocational training and studying abroad] **What kind of training was it? Please name only the highest level of vocational training you have.** INT: Show list 31! One response only! A: I received in-firm training B: I completed an in-firm apprenticeship C: I attended vocational training school D: I attended a university E: Other 7: Declined 8: Don't know	
32 (B) (ZP)	DStich=1 [Baseline sample] **Not counting training or apprenticeship, what year did you start your first full-time job in your primary occupation?** INT: Please read out upon request: (PROG: green) „Please think oft he moment when you started to work" PROG: designation of year must not be smaller than year of birth of target subject (Question 2) PROG: maximal value of year is 2017. In the year _ _ _ _ 9997: Declined 9998: Don't know --- 9995: Have never been employed full-time	 33 --- P0
32a (P) (ZP)	DStich=0 [Panel sample] & Proxy=0 [TP] (following first sentence not insert, if: D05=20 [grew up in an institution] | D05=1 & D03=0 [one main caregiver, deceased] | D05=2 & D03=0 & D04=0 [two main caregiver and both deceased): **Let's continue with your situation.** **(All): Now I'd like to ask you a few questions about your occupation. Not counting training or apprenticeship, did you...** INT: Please read out examples! 1: take up your first full-time job in [DLJ-1] or earlier --- 2: take up your first full-time job in [DLJ-1] or later --- 3: or have you never been employed full-time? 7: Declined 8: Don't know	 35 --- 33 --- P0

33 (B/P) (ZP)	(DStich=1 [Baseline sample] & 32≠9995 [NOT never fulltime employed]) | (DStich=0 [Panel sample] & Proxy=0 [TP] & 32a=2 [begin of fulltime employment in year <DLJ> or later]) **What was your first occupational position when you started <u>your first job</u>? Which item in this lis applied to you?** INT: Show Blue Card! INT: Please read out upon request: (PROG: green) **„Please think oft he moment when you started to work.“** Code number: _ _ 97: Declined 98: Don’t know Code number=52|53|63 --- Code number (≠52|53|63) | (=97|98)	33a --- 34
33a (B/P) (ZP)	(DStich=1 [Baseline sample] & 32≠9995 [NOT never fulltime employed] & 33=52|53|63 [employee with qualified occupation | employee with high qualified occupation and capacity-function | skilled worker]) | (DStich=0 [Panel sample] & Proxy=0 [TP] & 32a=2 & 33=52|53|63 [employee with qualified occupation | employee with high qulified occupation and capacity-function | skilled worker]) **Did you hold a managerial position there?** INT: Please read out upon request: (PROG: green) „**managerial position means that people work according to your instructions.“** 1: Yes 2: No 7: Declined 8: Don’t know	
34 (B/P) (ZP)	(DStich=1 [Baseline sample] & 32≠9995 [NOT never fulltime employed]) | (DStich=0 [Panel sample] & Proxy=0 [TP] & 32a=2 [begin of fulltime employment in year <DLJ> or later]) **What type of work did you start out doing there?** **Please ofcribe your job exactly.** PROG: set 120 marker occupation: _____ 7: Declined 8: Don’t know	
34a (B/P) (ZP)	(DStich=1 [Baseline sample] & 32≠9995 [NOT never fulltime employed]) | (DStich=0 [Panel sample] & Proxy=0 [TP] & 32a=2 [begin of fulltime employment in year <DLJ> or later]) **Is there a special name for this occupation?** PROG: set 12 marker Job:	

	_____ 7: Declined 8: Don't know	
35 (B/P) (ZP)	(DStich=1 [Baseline sample] & 32≠9995 [NOT never fulltime employed]) | (DStich=0 [Panel sample] & Proxy=0 [TP] & 32a=2 [begin of fulltime employment in year <DLJ> or later]) **Since the start of your working life, have you ever had an extended interruption in employment, either once or more than once, for a period <u>longer than six months</u>? What is meant here are only extended breaks between two jobs.** 1: Yes --- 2: No 7: Declined 8: Don't know	36 --- P0
36 (B/P) (ZP)	(DStich=1 [Baseline sample] & 32≠9995 [NOT never fulltime employed] & 35=1 [employment interrupted for more than half a year]) | (DStich=0 [Panel sample] & Proxy=0 [TP] & 32a=1|2 [begin of fulltime employment in year <DLJ> or earlier | <DLJ> or later] & 35=1 [employment interrupted for more than half a year]) **How many years in total has your working life been interrupted?** INT: Roand off to full years! PROG: Designation of year must not be higher than age of respondent Years _ _ 97: Declined 98: Don't know	
37 (B/P) (ZP)	(DStich=1 [Baseline sample] & 32≠9995 [NOT never fulltime employed] & 35=1 [employment interrupted for more than half a year]) | (DStich=0 [Panel sample] & Proxy=0 [TP] & 32a=1|2 [start fulltime employment of respondent in year <DLJ-1> or earlier | <DLJ> or later] & 35=1 [employment interrupted for more than half a year]) **What sort of breaks were they? What were the reasons?** INT: Show list 37! Multiple responses possible! PROG: multiple choice allowed. A: Extended parental leave, maternity leave B: Household work, childcare (beyond extended parental leave or maternity leave) C: Military service, war imprisonment / captivity D: Military service or community service E: Vocational training, further training, higher education F: Prolonged unemployment G: Sickness, injury in accident, rehabilitation H: Other reasons 1: mentioned 0: not mentioned 7: declined 8: don't know	

P0 (B/P) (ZP/Px)	INT: Don’t read out! Was there an interruption in the module background and education that lasted at least one minute? 1: yes --- 2: no --- (P0=2) & (32=9995 | 32a=3|7|8) & (DStich=1 [Baseline sample] | (DStich=0 [Panel sample] & Proxy=0 [TP]))	 P0a --- 38 --- 200a
P0a (B/P) (ZP/Px)	P0=1 [interruption] INT: Don’t read out! INT: If there were several interruptions please state the overall duration. INT: Please roand up on whole minutes. PROG: minimal value: 1. How long did this interruption last? Please give me the break in minutes. _ _ _Minutes --- 32=9995 | 32a=3|7|8) & (DStich=1 [Baseline sample] | (DStich=0 [Panel sample] & Proxy=0 [TP]))	 38 --- 200a
38	[completed Age]>=60 & (DStich=1 [Baseline sample] | (DStich=0 [Panel sample] & Proxy=0 [TP])) --- [completed Age]<60 & (DStich=1 [Baseline sample] | (DStich=0 [Panel sample] & Proxy=0 [TP]))	 100 --- 101

Nr.	EMPLOYMENT AND TRANSITION TO RETIREMENT	Continue with
	PROG: Timestamp	
100px (P) (Px)	Proxy>0 [Proxy] & DStich=0 [Panel sample] **We start the interview with some questions about your employment situation.** **Have you ever been gainfully employed?** 1: Yes 7: Declined 8: Don't know [completed age]>=60 --- [completed age]<60 --- 2: No	 100 --- 101 --- P1
100 (B/P) (ZP/Px)	[completed Age>=60] & ((Proxy=0 [TP] & DStich=1 [Baseline sample] & 32≠9995 [was employed]) | (Proxy=0 [TP] & DStich=0 [Panel sample] & 32a≠3|7|8 [was employed]) | (Proxy>0 [Proxy] & DStich=0 [Panel sample] & 100px2≠2 [was employed or missing])) **Now I'd like to talk about your <u>current situation</u>.** **Are you currently receiving an old-age pension or any retirement benefits from your <u>gainful employment</u>?** INT: Please do not include widows´ pensions, invalidity pensions, or occupational disability pensions! 1: Yes --- 2: No 7: Declined 8: Don't know	 102 --- 101
101 (B/P) (ZP/Px)	([completed Age<60] & ((Proxy=0 [TP] & DStich=1 [Baseline sample] & 32≠9995 [was employed]) | (Proxy=0 [TP] & DStich=0 [Panel sample] & 32a≠3|7|8 [was employed]) | (Proxy>0 [Proxy] & DStich=0 [Panel sample] & 100px2≠2 [was employed or missing]))) |100=2|7|8 [no pension/retirement] **Are you <u>currently</u> employed, unemployed, or not working for reasons other than unemployment? Which item(s) in this lis apply to you?** INT: Show list 101! Count unemployed person, early retirees, pensioneers, and retirees as unemployed, early retirees, pensioneers and retirees, respectively, if they are working on the side. Early retirement can coincide with unemployment: if the respondent answers with both, tick early retirement (Item A)! Count any other double responses in addition to employment (i.e., retraining and employment; maternity/childcare leave and employment; homemaker and employment) as secondary employment (Item L)! <u>One</u> response only! PROG: Allow only one nomination. <u>Currently not employed</u>**:** I am currently: 01: A in early retirement:	

	02: B unemployed (without ABM / “1 euro job”)	165
	03: C in the approaching retirement part-time employment with zero working hours	163
	04: D in early retirement with invalidity or occupational disability pension 05: E in early retirement (early pensioning)	172
	06: F in occupational retraining, further education 07: G on maternity/childcare leave 08: H a homemaker 09: J not employed for other reasons Proxy=0 [TP]	173
	Proxy>0 [Proxy]	175
	Currently employed: I am currently: 10: K employed part-time or full-time in my primary occupation (incl. job creation measures) (also ABM / “1 euro job”)) 11: L in irregular or marginal employment or working in a secondary job DStich=0 [Panel sample]	131A
	DStich=1 [Baseline sample]	131
	97: Declined 98: Don’t know	P1
102 (B/P) (ZP/Px)	100=1 [pension/retirement] **Sometimes pensioneers and retirees keep working after retirement. What about you: Are you working at the moment?** 1: Yes	102a
	2: No 7: Declined 8: Don’t know Proxy=0 [TP]	103
	Proxy>0 [Proxy]	104
102a (B/P) (ZP/Px)	100=1 [pension/retirement] & 102=1 [still employed] **Do you work as a worker or an employee or are you self-employed?** 1: employed as a worker/ employee 2: self-employed 7: declined 8: don’t now	
102b (B/P) (ZP/Px)	100=1 [pension/retirement] & 102=1 [still employed] **What kind of work do you currently do? Please describe your job exactly.** PROG: set 120 marker Occupation: _____	

	7: Declined 8: Don't know	
102c (B/P) (ZP/Px)	100=1 [pension/retirement] & 102=1 [still employed] **Is there a special name for this occupation?** PROG: set 120 marker Occupation: _____ 7: Declined 8: Don't know	
102d (B/P) (ZP/Px)	100=1 [pension/retirement] & 102=1 [still employed] (102a=1|7|8): **Are you employed at the same employer like before your retirement?** (102a=2): **Do you work for your former employer?** 1: Yes 2: No 7: Declined 8: Don't know	
102e (B/P) (ZP/Px)	100=1 [pension/retirement] & 102=1 [still employed] **Do you carry out your work** 1: regularly or --- 2: at special times in the year? 7: Declined 8: Don't know	102g --- 102f
102f (B/P) (ZP/Px)	100=1 [pension/retirement] & 102=1 [still employed] & 102e=2|7|8 [irregulate EWT] **If you sum up, how many months per year are those?** PROG: allow max. 12 month _ _ months 7: Declined 8: Don't know	
102g (B/P) (ZP/Px)	100=1 [pension/retirement] & 102=1 [still employed] **And how many hours per week do you work?** INT: roand up half hours INT: upon request of workers who work irregularly: (PROG: green) **„Please refer only to your working months."** PROG: allow min. 1 hour/week. PROG: allow max. 168 hours/Woche	

	_ _ hours per week 9997: Declined 9998: Don't know --- Proxy=0 [TP] --- Proxy>0 [Proxy]	 -------- 103b -------- 104
103 (B/P) (ZP)	Proxy=0 [TP] & 100=1 & 102=2 [not employed] **Do you plan to take up employment again?** INT: Please read out answer options! 1: Yes, as soon as possible --- 2: Yes, later 3: No 7: Declined 8: Don't know	 103a --------- 104
103a (B/P) (ZP)	Proxy=0 [TP] & 100=1 [pension/retirement] & 102=2 [not employed] & 103=1 [intention new occupation.] **Have you made any effort to find a job in the last four weeks?** 1: Yes 2: No 7: Declined 8: Don't know	 104
103b (B/P) (ZP)	Proxy=0 [TP] & 100=1 [pension/retirement] & 102=1 [still employed] **What motivated you to take up work during retirement?** INT: Please read out examples! Multiple responses possible! PROG: allow multiple choice Items: A: My current financial situation B: I enjoy working C: It's important to me to maintain contact with other people D: I want to continue doing something useful E: Other reasons (*please note*) _____ 1: Mentioned 0: Not mentioned 7: Declined 8: Don't know	
103c	omitted.	
103d	omitted.	
103e	omitted.	

104 (B/P) (ZP/Px)	100=1 [pension/retirement] **How long have you been receiving a pension or retirement benefits from your previous job? Please name the month and year when you started receiving pension/retirement benefits.** PROG: designation of year must not be smaller than year of birth (Question 2). PROG: max. value of year is 2017. Since month _ _ 97: Declined 98: Don't know Year _ _ _ _ 9997: Declined 9998: Don't know --- DStich=1 [Baseline sample] --- DStich=0 [Panel sample] & (Year of 104<DLJ) --- DStich=0 [Panel sample] & ((Year of 104≥DLJ) | (DLJ=9997|9998))	--- 105b --- P1 --- 105b
105.	omitted.	
105b (B/P) (ZP/Px)	((DStich=1 [Baseline sample] & 100=1 [Pension/retirement benefits]) | (DStich=0 [Panel sample] & 100=1 [Pension/retirement benefits] & 104>=DLJ [Start of the Retirement since the last interview])) **Are you receiving a pension or pension with durable deductions due to premature start?** 1: Yes --- 2: No --- 105b=2 & ((Year from 104>2013) & (Year of retirement according to question 104 minus year of birth according to question 2 >62)) 105b=2, but checking is not possible --- 7: Declined 8: Don't know	 105c --- 106 --- 105e --- 106
105c (B/P) (ZP/Px)	((DStich=1 [Baseline sample] & 100=1 [Pension/retirement benefits]) | (DStich=0 [Panel sample] & 100=1 [Pension/retirement benefits] & 104>=DLJ [Start of the retirement since the last interview])) & 105b=1 [pension deductions] **What percentage of the pension has been deducted due to early retirement? Please indicate the percentage of the deductions** PROG: Forced entry before and after the decimal point. PROG: Please remove missingcodes before the decimal point. INT: If respondent can only name the number of months, deductions are calculated for, please use the button "Number of months, deductions are calculated for ".	

	_ _, _ percent 105c <= 18,0 --- 105c > 18,0 997: Declined 998: Don't know --- PROG: Button 95: Only number of months known deductions are calculated for	 106 --- 105d --- 105d
105d (B/P) (ZP/Px)	((DStich=1 [Baseline sample] & 100=1 [Pension/retirement benefits]) | (DStich=0 [Panel sample] & 100=1 [Pension/retirement benefits] & 104>=DLJ [Start of the retirement since the last interview.])) & 105b=1 [pension deductions] & 105c=95 [Only number of months in which deducted benefits are paid known] | 997 | 998 [missing] | > 18,0 [Deductions over legally possible 18 percent] **For how many months of your early retirement will your pension or benefits be deducted according to their amount?** **Please indicate the number of months deductions are calculated for.** _ _ Months 97: Declined 98: Don't know	 106
105e (B/P) (ZP/Px)	(105b=2) & (Year from 104>2013) & ((year from question 104 - Jahr in Frage2) > 62) | (105b=2 & checking no possible)) **Since July 1, 2014, there is a possibility for persons who have been insured for at least 45 years in statutory pension insurance to retire without any deductions at the age of 63. One then receives the so-called "Pension at age 63".** **How is it in your case? Are you getting this "Pension at age 63"?** 1: Yes 2: No 7: Declined 8: Don't know	 106
106 (B/P) (ZP/Px)	(DStich=1 [Baseline sample] & 100=1 [pension/retirement]) | (DStich=0 [Panel sample] & 100=1 [pension/retirement] & 104>=DLJ [start of pension since last survey.]) **What about the situation <u>immediately</u> prior to receiving your pension or retirement benefits? Which item on this list would apply to you?** INT: Show list 106! <u>One</u> response only! PROG: allow only <u>one</u> choice! 01: A I was employed (including short-time work) 02: B I was in the approaching retirement part-time employment with zero working hours. Proxy=0 [TP] ---	 110 ---

	Proxy>0 [Proxy] --- 03: C I was unemployed. --- 04: D I was an early retiree (including any progressive retirement scheme) --- 05: E I received an invalidity/occupational invalidity pension 06: F I was sick for a longer period and received money from my health insurance 07: G I was receiving re-training/training or further training 08: H I was a homemaker 09: J Other (*please note):* _____ --- 97: Declined 98: Don't know Proxy=0 [TP] --- Proxy>0 [Proxy]	113 --- 106a --- 106a --- 106a --- 110 --- 113
106a (B/P) (ZP/Px)	((DStich=1 & 100=1) | (DStich=0 & 100=1 &104>=DLJ)) & 106=3-9 [not employed before] **And since when were you** (106=3): **… unemployed?** (106=4): **… in early retirement/ pension?** (106=5): **… in this retirement?** (106=6): **… ill?** (106=7): **… in this educational programme?** (106=8): **… homemaker?** (106=9): **… not working?** **Please give me month and year.** PROG: designation of year must not be smaller than year of birth (Question 2). PROG: Set max. value of year to 2017. month _ _ 97: Declined 98: Don't know year _ _ _ _ 9997: Declined 9998: Don't know --- Proxy=0 [TP] --- Proxy>0 [Proxy]	--- 110 --- 113
107	Omitted.	
108	Omitted.	
109	Omitted.	
110 (B/P) (ZP)	Proxy=0 [TP] & ((DStich=1 [Baseline sample] & 100=1 [pension/retirement]) | (DStich=0 [Panel sample] & 100=1 [pension/retirement] & 104>=DLJ [start of pension since last survey.]).])) **If you think back to your transition to retirement:** **How difficult was it for you?** INT: Show list 110!	

	1: Very difficult 2: Difficult 3: A little difficult 4: Hardly difficult 5: Not at all difficult 7: Declined 8: Don't know	
111	Omitted.	
112	Omitted.	
113 (B/P) (ZP/Px)	(DStich=1 [Baseline sample] & 100=1 [pension/retirement]) │ (DStich=0 [Panel sample] & 100=1 [pension/retirement] & 104>=DLJ [start of pension since last survey.]) **Up to what year were you employed full-time in your primary occupation?** PROG: designation of year must not be smaller than year of birth (Question 2). PROG: max. value of year is 2017. Until the year:_____ 9997: Declined 9998: Don't know --- 9995: never employed	114 --- 127
114 (B/P) (ZP/Px)	((DStich=1 [Baseline sample] & 100=1) │(DStich=0 [Panel sample] & 100=1 &104>=DLJ)) & 113≠9995 [ever employed] **What was your previous occupational status?** **Please give me the appropriate code number.** INT: Show Blue Card! Code number: _ _ 97: Declined 98: Don't know Code number =52|53|63 --- Code number (≠52|53|63) | (=97|98)	114a --- 115
114a (B/P) (ZP/Px)	((DStich=1 [Baseline sample] & 100=1) │ (DStich=0 [Panel sample] & 100=1 & 104>=DLJ)) & 113≠9995 & 114=52|53|63 [(high)qualified employee, skilled worker] **Did you hold a managerial position there?** INT: please read upon request: (PROG: green) „managerial position means that person work according to your instructions..“ 1: yes 2: no 7: Declined 8: Don't know	

115 (B/P) (ZP/Px)	((DStich=1 [Baseline sample] & 100=1 [pension/retirement]) │ (DStich=0 [Panel sample] & 100=1 [pension/retirement] & 104>=DLJ [start of pension since last survey])) & 113≠9995 [ever employed] **What type of work did you start out doing there? Please ofcribe your job exactly.** PROG: set 120 marker. occupation: _____ 7: Declined 8: Don't know	
115a (B/P) (ZP/Px)	((DStich=1 [Baseline sample] & 100=1 [pension/retirement]) │ (DStich=0 [Panel sample] & 100=1 [pension/retirement] & 104>=DLJ [start of pension since last survey])) & 113≠9995 [ever employed] **Is there a special name for this occupation?** PROG: set 120 marker. job: _____ 7: Declined 8: Don't know	
116 (B/P) (ZP/Px)	((DStich=1 [Baseline sample] & 100=1) │ (DStich=0 [Panel sample] & 100=1 & 104>=DLJ)) & 113≠9995 & 114≠10 - 14 & ≠40 – 44 [no farmer & official] **What sector was the last company in that you worked for? Was it...** INT: Please read out examples! 1: an agricultural or forestry business 2: an industrial business 3: a handicraft business 4: a commercial or service business 5: or was it part of the public service? 7: Declined 8: Don't know	
117 (B/P) (ZP/Px)	((DStich=1 [Baseline sample] & 100=1) │ (DStich=0 [Panel sample] & 100=1 & 104>=DLJ)) & 113≠9995 & 114≠21-23 & ≠31-34 & ≠41-44 [no self-employed, professions, officers] **About how many people were employed at your place of work including owner and trainees?** INT: Show list 117! If not known exactly, get an estimate! 1: fewer than 5 employees 2: 5 and more, but less than 20 employees 3: 20 and more, but less than 100 employees 4: 100 and more, but less than 200 employees 5: 200 and more, but less than 2,000 employees 6: 2,000 employees and more 7: Declined 8: Don't know	

118 (B/P) (ZP/Px)	((DStich=1 [Baseline sample] & 100=1) | (DStich=0 [Panel sample] & 100=1 & 104>=DLJ)) & 113≠9995 [ever employed] **How many hours per week did you last work at your last job in your primary occupation, including overtime?** INT: Roand up half-hours! PROG: allow max. 168 hours/week. PROG: three-digit. Hours per week _ _ _ 997: Declined 998: Don't know 113=1997-2017 | 9997 | 9998 --- 113<1997	 120 --- 123
119	Omitted.	
120 (B/P) (ZP/Px)	((DStich=1 [Baseline sample] & 100=1) | (DStich=0 [Panel sample] & 100=1 & 104>=DLJ)) & 113=1997–2017|9997|9998 [last employment ended since 1997] **Did you take part in a partial retirement program for older employees that provided partial wage compensation?** 1. Yes --- 2. No 7: Declined 8: Don't know	 121 --- 123
121 (B/P) (ZP/Px)	((DStich=1 [Baseline sample] & 100=1) | (DStich=0 [Panel sample] & 100=1 & 104>=DLJ)) & 113=1997–2017|9997|9998 [last employment ended since 1997] & 120=1 [partial retirement yes] **There are several forms of partial retirement. Which of the following applies to you?** INT: Show list 121! <u>One</u> response only! 1: Part-time model: I worked half of my normal weekly working hours up to the start of retirement 2: Block model: In the first half of partial retirement, I worked the same working hours as before; in the second half, I was released from work (zero working hours) up to the start of retirement 3: or another arrangement 7: Declined 8: Don't know	
122 (B/P) (ZP/Px)	((DStich=1 [Baseline sample] & 100=1) | (DStich=0 [Panel sample] & 100=1 & 104>=DLJ)) & 113=1997–2017|9997|9998 [last employment ended since 1997] & 120=1 [partial retirement yes] **How many years did you spend in partial retirement?**	

	INT: In the case of the block model: Years from the beginning of wage or salary reduction up to start of retirement! PROG: max. value is 96. PROG: Years must not be higher than respondent's age in years. years _ _ 97: Declined 98: Don't know	
123 (B/P) (ZP/Px)	((DStich=1 [Baseline sample] & 100=1) | (DStich=0 [Panel sample] & 100=1 & 104>=DLJ)) & 113≠9995 [ever employed] (all): **How many years in total did you work before retiring?** (121=2): **Please include the years you spent in the second phase of "block model" partial retirement with zero working hours.** PROG: max. value is 96. PROG: year must not be higher than age in years. years _ _ 97: Declined 98: Don't know --- Proxy=0 [TP] --- Proxy>0 [Proxy]	--- 124 --- 125
124 (B/P) (ZP)	Proxy=0 [TP] & (((DStich=1 [Baseline sample] & 100=1) | (DStich=0 [Panel sample] & 100=1 & 104>=DLJ)) & 113≠9995 [ever employed]) **Why did you stop working full-time in your primary occupation?** INT: Show list 124! Multiple responses possible! PROG: multiple choice allowed A: Because I had reached retirement age B: Because I wanted to stop as early as possible C: Because it would be too difficult to combine the double burden of housework and a full-time job D: Because my partner/spouse is retired E: In order to have enough time for myself F: In order to be able to take care of someone who is sick or invalid G: For family reasons H: For health reasons J: For internal company reasons K: I lost my job L: Another reason *(please note):* _____ 1: mentioned 0: not mentioned 7:Declined 8: Don't know	

125 (B/P) (ZP/Px)	((DStich=1 [Baseline sample] & 100=1) | (DStich=0 [Panel sample] & 100=1 & 104>=DLJ)) & 113≠9995 [ever employed] **Are you entitled to a company pension, a company supplementary pension, or VBL (public sector employees' supplementary pension system)?** 1: Yes 2: No 7: Declined 8: Don't know DStich=1 [Baseline sample] --- DStich=0 [Panel sample]	 127 --- 127a
126	Omitted.	
127 (B) (ZP/Px)	DStich=1 [Baseline sample] & 100=1 [pension/ retirement] Proxy=0 [TP] & Year aus 104<=2003 [begin of pension/ retirement before 2004] --- Proxy=0 [TP] & Year aus 104>=2004 [begin of pension/ retirement 2004 or later] --- Proxy=0 [TP] & Year aus 104=9998|9998 [Year unknown] --- Proxy>0 [Proxy]	 P1 --- 129 --- P1 --- P1
127a (P) (ZP/Px)	DStich=0 [Panel sample] & 100=1 [pension/ retirement] & Year out of 104>=DLJ [begin of retirement since last survey.] Proxy=0 [TP] & Year aus 104>=DLJ [begin of retirement since last survey] --- Proxy=0 [TP] & Year aus 104=9998|9998 [Year unknown] Proxy>0 [Proxy]	 129 --- P1 P1
128	Omitted.	
129 (B/P) (ZP)	Proxy=0 [TP] & ((DStich=1 [Baseline sample] & 100=1 [retirement/pension] & Year out of 104>=2004 [RentYear>=2004]) | (DStich=0 [Panel sample] & 100=1 [pension/retirement] & Year out of 104>=DLJ [retirement year since last survey]])) **How has your life changed due to entering retirement?** INT: Show Orange list B! 1: Has improved greatly 2: Has improved somewhat 3: Has stayed the same 4: Has worsened somewhat 5: Has gotten much worse 7: Declined 8: Don't know	 P1
130	Omitted.	

131a (P) (ZP/Px)	DStich=0 [Panel sample] & 101=10|11 [fulltime full- time or part- time employed; irregular marginal or avocational employed.] **Have you made any professional changes [DLM/ DLJ]? For example, have you started a new job or changed careers, or taken on new tasks or responsibilities at work?** 1: Yes --- 2: No --- 7: Declined 8: Don't know	131 --- 135 --- 131
131 (B/P) (ZP/Px)	(DStich=1 [Baseline sample] & 101=10|11) | (DStich=0 [Panel sample] & 101=10|11 & 131A=1|7|8 [occupational change]) **What occupational status would apply to you at the moment?** INT: Show Blue Card! Only include occupational status in main job! Code number: _ _ 97: Declined 98: Don't know Code number=52|53|63 --- Code number(≠52|53|63) | (=97|98)	131b --- 132
131b (B/P) (ZP/Px)	((DStich=1 [Baseline sample] & 101=10|11) | (DStich=0 [Panel sample] & 101=10|11 & 131A=1|7|8)) & 131=52|53|63 [(high) qualified employee, skilled worker] **Do you hold a managerial position there?** INT: Please read upon request: (PROG: green) „**managerial position means that person work according to your instructions.“** 1: yes 2: no 7: Declined 8: Don't know	
132 (B/P) (ZP/Px)	(DStich=1 [Baseline sample] & 101=10|11 [fulltime full- time or part- time employed; irregular marginal or avocational employed.]) | (DStich=0 [Panel sample] & 101=10|11 & 131A=1|7|8 [occupational change]) **What kind of work do you currently do? Please describe your job exactly.** PROG: 120 marks vorsehen. Occupation: _____ 7: Declined 8: Don't know	

132a (B/P) (ZP/Px)	(DStich=1 [Baseline sample] & 101=10|11) | (DStich=0 [Panel sample] & 101=10|11 & 131A=1|7|8 [occupational change]) **Is there a special name for this occupation?** PROG: 120 Zeichen vorsehen. Job: _____ 7: Declined 8: Don't know	
133.	Omitted.	
134 (B/P) (ZP/Px)	((DStich=1 [Baseline sample] & 101=10|11) | (DStich=0 [Panel sample] & 101=10|11 & 131A=1|7|8 [occupational change])) & ((131≠10-14|40-44) [not farmer or official] | (131=97|98) [missing]) PROG: Ask this question only, if F131≠10-14, 40-44 or F131=missing **If you think about your current job:** **What sector is the company in where you work? Is it...** INT: Please read out examples! 1: an agricultural or forestry business 2: an industrial business 3: a handicraft business 4: a commercial or service business 5: or was it part of the public service? 7: Declined 8: Don't know	
135 (B/P) (ZP/Px)	((DStich=1 [Baseline sample] & 101=10|11) | (DStich=0 [Panel sample] & 101=10|11)) & ((131≠21-23|31-34|41-44) | (131=97|98)) **Approximately how many other people work for the company you work for, including owners and trainees?** INT: Show list 135! If not known exactly, get an estimate! 1: fewer than 5 employees 2: 5 and more, but less than 20 employees 3: 20 and more, but less than 100 employees 4: 100 and more, but less than 200 employees 5: 200 and more, but less than 2,000 employees 6: 2,000 employees and more 7: Declined 8: Don't know	
136 (B/P) (ZP/Px)	101=10|11 [fulltime full- time or part- time employed; irregular marginal or avocational employed.] **Are you entitled to a company pension, company supplementary pension, or VBL (public sector employees or supplementary pension system)?**	

	INT: Please read out upon request: (PROG: green) **„What is meant here are all demands that you got in your working life.“** 1: Yes 2: No 7: Declined 8: Don’t know	
137 (B/P) (ZP/Px)	101=10|11 [fulltime full- time or part- time employed; irregular marginal or avocational employed.] **How many hours a week do you currently work at your job, including overtime?** INT: Roand up half-hours! PROG: allow min. 1 hour/week PROG: allow max. 168 hours/week Hours per week_ _ _ 997: Declined 998: Don’t know --- <30 hours per week Proxy=0 [TP] --- Proxy>0 [Proxy] --- 131=10–36 [not dependent employed] --- 131≠10-36 [dependent employee or missing] & completed age out of F2<55 -- --- 131≠10-36 [dependent employee or missing] & completed age out of F2>=55 --- >=30 hours per week |997|998 --- 131=10–36 [not dependent employed] --- 131≠10-36 [dependent employee or missing] & completed age out of F2<55 Proxy=0 [TP] --- Proxy>0 [Proxy] --- 131≠10-36 [dependent employee or missing] & completed age out of F2>=55	--- 138 --- --- --- 145 --- 145 --- 139 --- 145 --- 142 --- 145 --- 139
138 (B/P) (ZP)	Proxy=0 [TP] & 101=10|11 [fulltime full- time or part- time employed; irregular marginal or avocational employed.] & 137<30 [half-time] **There are many reasons for working part-time. What were the main reasons for you?** INT: Show list 138! Multiple responses possible! PROG: allow multiple choice A: Because it would be too difficult to combine the double burden of housework and a full-time job B: Because my partner/spouse is retired C: In order to have enough time for myself D: In order to be able to take care of someone who is sick or invalid E: For family reasons F: For health reasons	

	G: For internal company reasons (i.e., short-time work) H: To prepare for retirement J: I was unable to find a full-time job K: Other reasons *(please note):* _____ 1: Mentioned 0: Not mentioned 7: Declined 8: Don't know PROG: answerbutton: 9: trifft nicht zu, es is eine Vollzeitstelle 131=10–36 [not dependent employed] --- 131≠10-36 [dependent employee] & completed age out of F2<55 --- 131≠10-36 [dependent employee] & completed age out of F2>=55	145 --- 142 --- 139
139 (B/P) (ZP/Px)	101=10|11 & completed age out of Question 2>=55 [over 54 J.] & 131≠10-36 [dependent employee or missing] **Are you currently in partial retirement?** 1: Yes --- 2: No Proxy=0 [TP] --- Proxy>0 [Proxy] --- 7: Declined 8: Don't know	 140 --- 142 --- 145 --- 145
140 (B/P) (ZP/Px)	101=10|11 & completed age out of Question 2>=55 [over 54 J.] & 131≠10-36 [dependent employee or missing] & 139=1 [partial retirement] **There are several forms of partial retirement. Which of the following applies to you?** INT: Show list 140! <u>One</u> response only! 1: Part-time model: I worked half of my normal weekly working hours up to the start of retirement 2: Block model: In the first half of partial retirement, I worked the same working hours as before; in the second half, I was released from work (zero working hours) up to the start of retirement 3: or another arrangement 7: Declined 8: Don't know	
141 (B/P) (ZP/Px)	101=10|11 & completed age out of Question 2>=55 [over 54 J.] & 131≠10-36 [dependent employee or missing] & 139=1 [partial retirement] **How long have you been in partial retirement?** INT: For the block model: Years since the start of wage/salary reduction! PROG: Designation of year must not be smaller than respondent's year of birth (Question 2). PROG: set max. value year to 2017.	

	year: _ _ _ _ 9997: Declined 9998: Don't know	 145
142 (B/P) (ZP)	Proxy=0 [TP] & 101=10|11 & 131≠10-36 [dependent employee or missing] **Do you intend to take part in a partial retirement program prior to retiring?** 1: Yes --- 2: No 7 Declined 8: Weiß noch not	 143 --- 145
143 (B/P) (ZP)	Proxy=0 [TP] & 101=10|11 & 131≠10-36 [dependent employee or missing] & 142=1 [intention partial retirement] **There are several forms of partial retirement. Which of the following would be an option for you?** INT: Show list 143! <u>One</u> response only! 1: Part-time model: I worked half of my normal weekly working hours up to the start of retirement 2: Block model: In the first half of approaching retirement part-time employment, I worked the same working hours as before; in the second half, I was released from work (zero working hours) up to the start of retirement Or some other disribution of the 50% reduced total working hours 7: Declined 8: Don't know	
144 (B/P) (ZP)	Proxy=0 [TP] & 101=10|11 & 131≠10-36 [dependent employee or missing] & 142=1 [intention partial retirement] **From what age on would you like to be in partial retirement?** INT: For the block model: age at which you would like to start wage/salary reduction! PROG: set max. value to 996. PROG: Designation of year must not be smaller than age. From the age of _ _ _years 997: Declined 998: Don't know	
144a (B/P) (ZP)	Proxy=0 [TP] & 101=10|11 & 131≠10-36 [dependent employee or missing] & 142=1 [intention partial retirement] **For how many years would you like to be in partial retirement?** PROG: set max. value to 96. For _ _ years 97: Declined 98: Don't know	

145 (B/P) (ZP/Px)	101=10|11 [fulltime full- time or part- time employed; irregular marginal or avocational employed.] **For how many years in total have you been employed?** INT: Please read out upon request: (PROG: green) **„Please don't include internships, apprenticeship and training."** PROG: Designation of year must not be higher than age. PROG: set max. value to 96. _ _ years 97: Declined 98: Don't know --- Proxy=0 [TP] --- Proxy>0 [Proxy]	--- 146 --- P1
146 (B/P) (ZP)	Proxy=0 [TP] & 101=10|11 [fulltime full- time or part- time employed; irregular marginal or avocational employed.] **At what age do you plan to stop working?** PROG: Designation of year must not be smaller than age. PROG: set max. value to 996. PROG: provide three digit Designation of year. At the age of _ _ _ years 997: Declined 998: Weiß noch not	
147 (B/P) (ZP)	Proxy=0 [TP] & 101=10|11 [fulltime full- time or part- time employed; irregular marginal or avocational employed.] **When you think of your present job: How satisfied or unsatisfied are you with the various aspects I'll read out to you now?** INT: Show list 147 and read out examples! 1: Very satisfied 2: Satisfied 3: Half/half 4: Unsatisfied 5: Very unsatisfied 6: Does not apply 7: Declined 8: Don't know **How satisfied are you at present with...** A: your earnings? B: your job itself, or in other words, with the kind of work you do? C: your working hours? D: your opportunities for career development or promotion? E: (131=10–36): the possibility for further education? (131≠10–36): the further training offered by your company?□□ F: the working atmosphere, i.e., relations with colleagues, subordinates, and supervisors?	

	G: your work as a whole? PROG: If "Declined/Don't know" switch to next item.	
148 (B/P) (ZP)	Proxy=0 [TP] & 101=10|11 [fulltime full- time or part- time employed; irregular marginal or avocational employed.] **A job can sometimes be quite strenuous. What would you say about yourself at present?** INT: Show list 148 and read out examples! Items: 1: Very stressed 2: Stressed 3: A bit stressed 4: Hardly stressed 5: Not at all stressed PROG: Answer button 6: Does not apply 7: Declined 8: Don't know **To what extent are you stressed by...** A: strenuous or repetitive physical activities like carrying heavy objects; standing or sitting for long periods? B: negative environmental factors such as noise, heat, dust, gases, toxic substances, poor lighting? C: pressure to complete heavy workloads or meet tight deadlines, nervous tension? D: new job responsibilities, i.e., new duties or switching to computerized systems? PROG: If "Declined/Don't know" switch to next item.	
149 (B/P) (ZP)	Proxy=0 [TP] & 101=10|11 [fulltime full- time or part- time employed; irregular marginal or avocational employed.] **How high would you estimate the likelihood of becoming unemployed in the near future? Would you say it is ...** INT: Please read out examples! 1: very likely 2: likely 3: unlikely 4: very unlikely? 7: Declined 8: Don't know	
150 (B/P) (ZP)	Proxy=0 [TP] & 101=10|11 [fulltime full- time or part- time employed; irregular marginal or avocational employed.] **Do you plan on changing jobs in the near future?** 1: Yes 2: No 7: Declined 8: Don't know	

151 (B/P) (ZP)	Proxy=0 [TP] & 101=10|11 [fulltime full- time or part- time employed; irregular marginal or avocational employed.] (131=10-36): **If you lost your present job, would it be easy, difficult, or almost impossible to find a job that is at least as good as the one you have now?** (131≠10-36): **If you lost your present job, would it be easy, difficult, or almost impossible to find a position that is at least as good as the one you have now?** 1: Easy 2: Difficult 3: Almost impossible 7: Declined 8: Don't know	
152 (B/P) (ZP)	Proxy=0 [TP] & 101=10|11 [fulltime full- time or part- time employed; irregular marginal or avocational employed.] (DStich=1): **There are courses and advanced occupational training programs available for many occupations. Think back over the past 10 years. Did you attend any training, courses, seminars, or events ofigned to provide occupational training or vocational retraining?** (DStich=0): **There are courses and advanced occupational training programs available for many occupations. Think back over the past 3 years. Did you attend any training, courses, seminars, or events ofigned to provide occupational training or vocational retraining?** 1: Yes --- 2: No 7: Declined 8: Don't know	153 --- 155
153 (B/P) (ZP)	Proxy=0 [TP] & 101=10|11 [fulltime full- time or part- time employed; irregular marginal or avocational employed.] & 152=1 [further education yes] **How many courses or programs for occupational training or retraining have you attended in the past** [DStich=1: 10 | DStich=0: 3] **years?** PROG: set max. value to 96. __sessions/courses 97: Declined 98: Don't know	
154 (B/P) (ZP)	Proxy=0 [TP] & 101=10|11 [fulltime full- time or part- time employed; irregular marginal or avocational employed.] & 152=1 [further education yes] **Thinking back to your most recent course or training program, what was your personal motivation for attending it?** **Please give your <u>most important</u> reason for attending.** INT: Show list 154! <u>One</u> response only!	

	1: Brush up on job skills that were not up-to-date 2: Expand job skills to take on additional responsibilities 3: To move to a new position 4: To work with new technologies (new machines, programs, etc.) 5: Career advancement (i.e., master craftsman) 6: Retrain for a different occupation 7: Another main reason (*please note*): _____ 97: Declined 98: Don't know	 156
155 (B/P) (ZP)	Proxy=0 [TP] & 101=10 | 11 [fulltime full- time or part- time employed; irregular marginal or avocational employed.] & 152=2 | mi [k. further education] **Would you have liked to take part in an advanced occupational training course or program in the last** [DStich=1: **10** | DStich=0: **3**] **years?** 1: Yes 2: No 7: Declined 8: Don't know	
156 (B/P) (ZP)	Proxy=0 [TP] & 101=10|11 [fulltime full- time or part- time employed; irregular marginal or avocational employed.] **Would you like to take part in an advanced occupational training course or program in the near future?** 1: Yes --- 2: No 7: Declined 8: Don't know	 157 --- 157a
157 (B/P) (ZP)	Proxy=0 [TP] & 101=10|11 [fulltime full- time or part- time employed; irregular marginal or avocational employed.] & 156=1 [will for further education] **What would be your main reason for attending this training course or program? Please give your <u>most important</u> reason.** INT: Show list 157! <u>One</u> response only! 1: Brush up on job skills that were not up-to-date 2: Expand job skills to take on additional responsibilities 3: To move to a new position 4: To work with new technologies (new machines, programs, etc.) 5: Career advancement (i.e., master craftsman) 6: Retrain for a different occupation 7: Another main reason (*please note*): _____ 97: Declined 98: Don't know	

157a (B/P) (ZP)	Proxy=0 [TP] & (DStich=1 [Baseline sample] & 101=10|11) | (DStich=0 [Panel sample] & 101=10|11 & 131A=1|7|8 [position change]) **On the whole, how well did your occupational training prepare you for your current job?** INT: Please show orange lis A! 1: Very good 2: Good 3: Average 4: Bad 5: Very bad 7 : Declined 8 : Don't know 95: No Training or studies	
157b (B/P) (ZP)	Proxy=0 [TP] & 101=10|11 [fulltime full- time or part- time employed; irregular marginal or avocational employed.] **Do you think that you are properly qualified for your job, given the current demands of your work?** INT: Please read out options! **In view of your qualifications, do you feel…** 1: overqualified for your job 2: appropriately qualified 3: or anderqualified? 7: Declined 8: Don't know	
158 (B/P) (ZP)	Proxy=0 [TP] & 101=10|11 [fulltime full- time or part- time employed; irregular marginal or avocational employed.] **How would you rate your present overall job situation?** INT: Show Orange list A! 1: Very good 2: Good 3: Average 4: Bad 5: Very bad 7: Declined 8: Don't know	
159 (B/P) (ZP)	Proxy=0 [TP] & 101=10|11 [fulltime full- time or part- time employed; irregular marginal or avocational employed.] **How has your job situation changed over the past** [DStich=1: **10** | DStich=0: **3**] **years?** INT: Show Orange list B!	

	1: Has improved greatly 2: Has improved somewhat 3: Has stayed the same 4: Has worsened somewhat 5: Has gotten much worse 7: Declined 8: Don't know	
160 (B/P) (ZP)	Proxy=0 [TP] & 101=10|11 [fulltime full- time or part- time employed; irregular marginal or avocational employed.] **How do you expect your job situation to change in future?** INT: Show Orange list C! 1: Will improve greatly 2: Will improve somewhat 3: Will remain the same 4: Will worsen somewhat 5: Will get much worse --- 6: Not applicable, I will be retiring soon 7: Declined 8: Don't know	P1 --- 162
161.	Omitted.	
162 (B/P) (ZP)	Proxy=0 [TP] & 101=10|11 [fulltime full- time or part- time employed; irregular marginal or avocational employed.] & 160>=6 [soonest pension] **How do you expect your life to change after retirement?** INT: Show Orange list C! 1: Will improve greatly 2: Will improve somewhat 3: Will remain the same 4: Will worsen somewhat 5: Will get much worse 6: Haven't ever given it any thought 7: Declined 8: Don't know	P1
163 (B/P) (ZP/Px)	101=3 [exemption phase partial retirement] **When did you start the approaching retirement part-time employment with zero working hours? Please give me the month and year when this phase began.** PROG: Designation of year must not be set before respondent's year of birth (Question 2). PROG: set max. value of year to 2017. Since month: _ _ 97: Declined 98: Don't know year: _ _ _ _ 9997: Declined 9998: Don't know	

	--- Proxy=0 [ZP] --- Proxy>0 [Proxy]	--- 164 --- 175
164 (B/P) (ZP)	Proxy=0 [TP] & 101=3 [exemption phase partial retirement] **When do you plan to begin retirement?** **Please give me the year.** PROG: set min. value to 2017. year: _ _ _ _ 9997: Declined 9998: Weiß noch not	 175
165 (B/P) (ZP/Px)	101=2|12 [unemployed] **Since when have you been unemployed? Please give me the month and year when you became unemployed.** PROG: Designation of year must not be set before respondent's year of birth (Question 2). PROG: set max. value to 2017. Since month: _ _ 97: Declined 98: Don't know Year: _ _ _ _ 9997: Declined 9998: Don't know 101=2 [without 1€-Job] --- 101=12 [with 1€-Job]	 166 --- 166a1
166 (B/P) (ZP/Px)	101=2 [unemployed without 1-Euro-Job] **Are you regisered as unemployed with the employment office?** 1: Yes 2: No 7: Declined 8: Don't know	 166a
166a1 (B/P) (ZP/Px)	101=12 [unemployed with 1-Euro-Job] **Since when do you carry out this '1-euro-job'? Please give me month and year.** PROG: Designation of year must not be set before respondent's year of birth (Question 2). PROG: set max. value to 2017. Since month _ _ 97: Declined 98: Don't know	

	Year: _ _ _ _ 9997: Declined 9998: Don't know	
166a (B/P) (ZP/Px)	101=2|12 [unemployed] (101=2): **There are a number of ways to earn extra money while unemployed. What about you: Do you have any side jobs of any child?** (101=12): **There are a number of ways to earn extra money while carrying out a ‚1-euro-job'. What about you: Do you have any side jobs of any child?** 1: Yes 2: No 7: Declined 8: Don't know --- Proxy=0 [TP] --- Proxy>0 [Proxy]	--- 167 --- 175
167 (B/P) (ZP)	Proxy=0 [TP] & 101=2|12 [unemployed] **Do you intend to get a regular job again at present or in the future?** INT: Please read out options! 1: Yes, as soon as possible --- 2: Yes, later 3: No 7: Declined 8: Don't know	167a --- 168
167a (B/P) (ZP)	Proxy=0 [TP] & 101=2|12 [unemployed] & 167=1 [will for fulltime employed yes] **Have you made any effort to find a job in the last four weeks?** 1: Yes 2: No 7: Declined 8: Don't know	
168 (B/P) (ZP)	Proxy=0 [TP] & 101=2|12 [unemployed] (167=1|2): **Do you think that you will have a hard time finding a new job because of your age?** (167=3|7|8): **Do you think that you will have a hard time finding a new job because of your age?** INT: show lis 168! 1: Yes, definitely 2: Probably yes 3: Perhaps 4: Probably not	

	5: No, not at all 7: Declined 8: Don't know	 175
169 (B/P) (ZP/Px)	101=1 [early retirement] **How long have you been in early retirement? Please give me the year you started early retirement.** PROG: Designation of year must not be set before respondent's year of birth (Question 2). PROG: set max. value to 2017. year: _ _ _ _ 9997: Declined 9998: Don't know	
169a (B/P) (ZP/Px)	101=1 [early retirement] **There are a number of ways to earn extra money in early retirement. What about you: do you have any side jobs of any child?** 1: Yes --- 2: No 7: Declined 8: Don't know Proxy=0 [TP] --- Proxy>0 [Proxy]	 170 --- 169b --- 175
169b (B/P) (ZP)	Proxy=0 [TP] & 101=1 [early retirement] & 169a=2|7|8 [secondary occupation no] **Do you intend to go back to work or get a job at present or in the future?** INT: Please read out answer options! 1: Yes, as soon as possible --- 2: Yes, later 3: No 7: Declined 8: Don't know	 169c --- 170
169c (B/P) (ZP)	Proxy=0 [TP] & 101=1 [early retirement] & 169a=2|7|8 & 169b=1 [will for employment.] **Have you made any effort to find a job in the last four weeks?** 1: Yes 2: No 7: Declined 8: Don't know	

170 (B/P) (ZP)	Proxy=0 [TP] & 101=1 [early retirement] **Did you actually want to stop working at this point, or would you have preferred to stopworking sooner or to continue working longer?** INT: Please read out answer options! 1: It was what I wanted 2: I would have preferred to stop sooner 3: I would have preferred to continue working 7: Declined 8: Don't know	 175
171	Omitted.	
172 (B/P) (ZP/Px)	101=4|5 [early pensioneer or early retired person] **Since when have you been receiving an invalidity / occupational invalidity pension? Please give me the year when you first received these benefits.** PROG: set max. value to 2017. PROG: Designation of year must not be set before respondent's year of birth (Question 2). year: _ _ _ _ 9997: Declined 9998: Don't know	
172a (B/P) (ZP/Px)	101=4|5 [early pensioneer or early retired person] **There are a number of ways to earn extra money in early retirement. What about you: do you have any side jobs of any child?** 1: Yes --- 2: No 7: Declined 8: Don't know Proxy=0 [TP] --- Proxy>0 [Proxy]	 175 --- 172b --- 175
172b (B/P) (ZP)	Proxy=0 [TP] 101=4|5 [early pensioneer or early retired person] & 172a=2|7|8 [secondary occupation no] **Do you intend to go back to work or get a job at present or in the future?** INT: Please read out answer options! 1: Yes, as soon as possible --- 2: Yes, later 3: No 7: Declined 8: Don't know	 172c --- 175

172c (B/P) (ZP)	Proxy=0 [TP] & 101=4|5 [early pensioneer or early retired person] & 172a=2|7|8 & 172b=1 [will for employment] **Have you made any effort to find a job in the last four weeks?** 1: Yes 2: No 7: Declined 8: Don't know	 175
173 (B/P) (ZP)	Proxy=0 [TP] & 101=6|7|8|9 [Retraining, parental leave, housewife / househusband, other reasons] **Do you intend to go back to work or get a job at present or in the future?** INT: Please read out answer options! 1: Yes, as soon as possible --- 2: Yes, later 3: No 7: Declined 8: Don't know	 173a --- 174
173a (B/P) (ZP)	Proxy=0 [TP] & 101=6|7|8|9 [Retraining, parental leave, housewife / househusband, other reasons] & 173=1 [will for employment] **Have you made any effort to find a job in the last four weeks?** 1: Yes 2: No 7: Declined 8: Don't know	
174 (B/P) (ZP)	Proxy=0 [TP] & 101=6|7|8|9 [Retraining, parental leave, housewife / househusband, other reasons] (173=1|2): **Do you think that you will have a hard time finding a new job because of your age?** (173=3|7|8): **Do you think that you will have a hard time finding a new job because of your age?** INT: Show list 174! 1: Yes, definitely 2: Probably yes 3: Perhaps 4: Probably not 5: No, not at all 7: Declined 8: Don't know	

175 (B/P) (ZP/Px)	101=1–9|12 [all not employed.] **Up to what year were you mainly employed in your primary occupation?** PROG: set max. value to 2017. PROG: designation of year must not be set before respondent's year of birth (Question 2). Up to the year _ _ _ _ 9997: Declined 9998: Don't know 9995: have never been employed	
	(DStich=1 [Baseline sample] & Year≠9995) | (DStich=0 [Panel sample] & (Year>=DLJ | Year=9997|9998))	176
	(DStich=1 [Baseline sample] & Year=9995) | (DStich=0 [Panel sample] & (Year<DLJ | Year=9995))	
	Proxy=0 [TP]	185
	Proxy>0 [Proxy]	P1
176 (B/P) (ZP/Px)	((DStich=1 [Baseline sample] & 101=1–9|12 [all not employed.] & 175≠9995 [ever employed]) | (DStich=0 [Panel sample] & 101=1–9|12 & 175>=DLJ|9997 | 9998 [end of employment since last survey])) **What was your previous occupational status?** **Please give me the appropriate code number.** INT: Show Blue Card! Code number: _ _ 97: Declined 98: Don't know	
	Code number=52|53|63	176a
	Code number (≠52|53|63) | (=97|98)	177
176a (B/P) (ZP/Px)	((DStich=1 [Baseline sample] & 101=1–9|12 & 175≠9995) | (DStich=0 [Panel sample] & 101=1–9|12 & 175>=DLJ|9997 | 9998)) & 176=52|53|63 [(high)qualified employee, skilled worker] **Did you hold a managerial position there?** INT: please read upon request: (PROG: green) **'managerial position means that person work according to your instructions'.** 1: Yes 2: No 7: Declined 8: Don't know	

177 (B/P) (ZP/Px)	(DStich=1 [Baseline sample] & 101=1–9|12 & 175≠9995) | (DStich=0 [Panel sample] & 101=1–9|12 & 175>=DLJ|9997 | 9998) **What kind of work did you do? Please describe your job exactly.** Prog: Provide 120 characters. Occupation: _____ 7: Declined 8: Don't know	
177a (B/P) (ZP/Px)	(DStich=1 [Baseline sample] & 101=1–9|12 & 175≠9995) | (DStich=0 [Panel sample] & 101=1–9|12 & 175>=DLJ|9997 | 9998 [end of employment since last survey]) **Is there a special name for this occupation?** PROG: 120 Zeichen vorsehen. Job: _____ 7: Declined 8: Don't know	
178 (B/P) (ZP/Px)	((DStich=1 [Baseline sample] & 101=1–9|12 & 175≠9995 | (DStich=0 [Panel sample] & 101=1–9|12 & 175>=DLJ|9997 | 9998 [end of employment since last survey])) & 176≠10-14|40-44 [not farmer or officials, missing] **What sector was the last company in that you worked for? Was it…** INT: Please read out examples! 1: an agricultural or forestry business 2: an industrial business 3: a handicrafts business 4: a commercial or service business 5: or was it part of the public service? 7: Declined 8: Don't know	
179 (B/P) (ZP/Px)	((DStich=1 [Baseline sample] & 101=1–9|12 & 175≠9995) | (DStich=0 [Panel sample] & 101=1–9|12 & 175>=DLJ|9997 | 9998)) & 176≠21-23|31-34|41-44 [not self-employees, professions or officials, missing] **About how many people were employed at your place of work including owner and trainees?** INT: Show list 179! If not known exactly, get an estimate! 1: fewer than 5 employees 2: 5 and more, but less than 20 employees 3: 20 and more, but less than 100 employees 4: 100 and more, but less than 200 employees 5: 200 and more, but less than 2,000 employees 6: 2,000 employees and more 7: Declined 8: Don't know	

180 (B/P) (ZP/Px)	(DStich=1 [Baseline sample] & 101=1–9|12 [all not employees.] & 175≠9995 [ever employed]) | (DStich=0 [Panel sample] & 101=1–9|12 & 175>=DLJ|9997 | 9998) **How many hours per week did you work in your primary occupation at the end of your full-time working life, including overtime?** INT: Roand up half hours! PROG: allow three digits designation. PROG: set max. value to 168. _ _ _ hours per week 997: Declined 998: Don't know --- Proxy=0 [TP] --- Proxy>0 [Proxy]	--- 182 --- 183
181.	Omitted.	
182 (B/P) (ZP)	(DStich=1 [Baseline sample] & 101=1–9|12 [all not employees.] & 175≠9995 [ever employed]) | (DStich=0 [Panel sample] & 101=1–9|12 & 175>=DLJ|9997 | 9998 [end of employment since last survey]) **And why did you stop working in your primary occupation?** INT: Show list 182! Multiple responses possible! PROG: allow multiple choice. A: Because I wanted to stop as early as possible B: Because it would be difficult to combine the double burden of housework and a full-time job C: Because my partner/spouse is retired D: In order to have enough time for myself E: In order to be able to take care of someone who is sick or invalid F: For family reasons G: For health reasons H: For internal company reasons J: I lost my job K: Other reasons (please note): _____ 1: mentioned 0: not mentioned 7: Declined 8: Don't know	
183 (B/P) (ZP/Px)	(DStich=1 [Baseline sample] & 101=1–9|12 & 175≠9995 [ever employed]) | (DStich=0 [Panel sample] & 101=1–9|12 & 175>=DLJ|9997 | 9998) **For how many years in total have you been employed?** PROG: designation of year must not be higher than age. _ _ years 97: Declined 98: Don't know	

184 (B/P) (ZP/Px)	(DStich=1 [Baseline sample] & 101=1–9|12 & 175≠9995 [ever employed]) | (DStich=0 [Panel sample] & 101=1–9|12 & 175>=DLJ|9997 | 9998) **Does your employment hisory to date entitle you to a company pension, company supplementary pension, or pension scheme for public employees such as VBL?** 1: Yes 2: No 7: Declined 8: Don't know --- Proxy=0 [ZP] --- Proxy>0 [Proxy]	--- 185 --- P1
185 (B/P) (ZP)	Proxy=0 [TP] & 101=1–9|12 [all not employed.] **How would you rate your present overall job situation?** INT: Show Orange list A! 1: Very good 2: Good 3: Average 4: Bad 5: Very bad --- 6: Not applicable, I am retired 7: Declined 8: Don't know	186 --- P1
186 (B/P) (ZP)	Proxy=0 [TP] & 101=1–9|12 [all not employed.] & 185≠6|7|8 [not retired] **How has your job situation changed over the <u>past</u>** [DStich=1: **10** | DStich=0: **3**] **<u>years</u>?** INT: Show Orange list B! 1: Has improved greatly 2: Has improved somewhat 3: Has stayed the same 4: Has worsened somewhat 5: Has gotten much worse 7: Declined 8: Don't know	
187 (B/P) (ZP)	Proxy=0 [TP] & 101=1–9|12 [all not employed.] & 185≠6|7|8 [not retired] **Just think for a moment of your future: How do you expect your job situation to change in future?** INT: Show Orange list C! 1: Will improve greatly 2: Will improve somewhat 3: Will remain the same 4: Will worsen somewhat 5: Will get much worse ---	P1 ---

	6: Not applicable, I will be retiring shortly 7: Declined 8: Don't know	189
188	Omitted.	
189 (B/P) (ZP)	Proxy=0 [TP] & 101=1–9|12 [all not employed.] & 185≠6|7|8 [not retired] & 187=6|78 [soon in retirement] **How do you expect your life to change after retirement?** INT: Show Orange list C! 1: Will improve greatly 2: Will improve somewhat 3: Will remain the same 4: Will worsen somewhat 5: Will get much worse 6: Haven't ever given it any thought 7: Declined 8: Don't know	P1
190	Omitted.	
191	Omitted.	
P1 (B/P) (ZP/Px)	INT: Do not read out! Was there an interruption in the module Work and Retirement that lasted at least one minute? 1: Yes --- 2: No	P1a --- 200a
P1a (B/P) (ZP/Px)	P1=1 [interruption] INT: Do not read out! How long did this interruption last? Please give me the break in minutes. INT: If there were several interruptions please give the overall duration of interruptions. INT: Please roand up to full minutes PROG: Min. value: 1. _ _ _minutes	200a

Nr.	MARITAL STATUS AND PARTNERSHIP	Continue with
200a (B/P) (ZP/Px)	**PROG: generate auxiliary variable(s):** H1: female partner (0=male | unknown, 1=female) =D26 H2: Baseline sample module (0=Panel sample module, 1=Baseline sample module) =0 if: DSTICH=0 [Panel sample] & (D21 & D22 & D23≠9) [complete preload] =1 if: (DSTICH=1 [Baseline sample]) | (DSTICH=0 [Panel sample] & (D21|D22|D23=9) [uncomplete preload]) | H3: hetero relationship (0=no, 1=yes | unknown) =D27 H10: unknown civil union (0=no,1=yes) =0 H11: unknown marriage (0=no,1=yes) =0 H12: unknown nonmarital cohabitation (nmc) (0=no,1=yes) =0 H13: single (0=no,1=yes | unknown) =0 H14: known marriage /civil union (0=no,1=yes) =0 H15: known nonmarital cohabitation (nmc) (0=no,1=yes) =0 H20: number of previous marriages (three digits) =empty H30: LAT (0=no, unknown, no partner, 1=LAT, partner not in the same household) =0 **PROG: timestamp** **Now to a different subject.** (Proxy=1): **I would like to remind you once again to answer the questions from the perspective of Mr / Ms [<NAME TP>].** (Proxy=2): **Let me remind you once again that the following questions are formulated to address you, Mr / Mrs [<NAME TP>].** --- H2=1 [Baseline sample module] --- H2=0 [Panel sample module] & D23=1 [married, separated] --- H2=0 [Panel sample module] & D21=0 [any partner unknown] --- H2=0 [Panel sample module] & D21=1 [known partner] & D22=0 [unmarried] --- H2=0 [Panel sample module] & D21=1 [known partner] & D22=1 & D23≠1 [married, living together]	--- 200 --- 280a --- 280b --- 280c --- 280d

Baseline sample module		
200 (B/P) (ZP/Px)	H2=1 [Baseline sample module] **What's your civil status? Which of this lists applies to you?** INT: Show lis 200! INT: Please enter marital status 'Married' living together with spouse even if the spouse doesn't live in the household of the target person due to health or professional reasons. 1: Married, living together with spouse 2: Married, living separated from spouse 3: Divorced 4: Widowed 5: Single 6: Civil union, living together (same-sex) 7: Civil union, living separated (same-sex) 8: Civil union, dissolved (same-sex) 9: Civil union, partner deceased (same-sex) 97: Declined 98: Don't know **PROG: update auxiliary variable(s):** H1: female partner (0=male | unknown, 1=female) 0 if: (g1=2 [women] & 200=1|2|3|4) | (g1=1 [man] & 200=6|7|8|9) | (200=97|98) 1 if: (g1=1 [man] & 200=1|2|3|4) | (g1=2 [women] & 200=6|7|8|9) H3: hetero relationship(0=no, 1=yes | unknown) 0 if: (200=6) 1 if: (200=1) | (200=97|98) H13: single (0=no,1=yes) 1 if: (200=97|98)	203_y --- 201 --- 201 --- 201 --- 201 --- 203_y --- 201 --- 201 --- 201 --- P2
201 (B/P) (ZP/Px)	H2=1 [Baseline sample module] & 200=2|3|4|5|7|8|9 [separated/ divorced/ widowed/ single/ /civil union separated: abrogated, deceased] **Do you have a steady partner at the moment?** 1: Yes 2: No 7: Declined 8: Don't know 200=2|7 [separated, civil union (CU) separated]	202 --- 251_y ---

	200=3|8 [divorced, CU cancelled] --- 200=4|9 [widowed, CU partner deceased] --- 200=5 [single] & Proxy=0 [TP] --- Proxy>0 [Proxy] & 200=5 [single] & 201=2 [without partner] --- Proxy>0 [Proxy] & 200=5 [single] & 201=7|8 [missing] **PROG: update auxiliary variable(s):** H10: unknown CU (0=no,1=yes) 1 if: 200=6 H11: unknown marriage (0=no,1=yes) 1 if: 200=1 H12: unknown NEL (0=no,1=yes) 1 if: 201=1 H13: without partner (0=no,1=yes) 1 if: 201=2|7|8	250_y --- 252_y --- 272 --- 273 --- P2
202 (B/P) (ZP/Px)	H2=1 [Baseline sample module] & 201=1 **Can you give me the first name of your partner?** INT: If the respondent does not want to say the name please read out the following text: (PROG: green): **‚The data will be exclusively evaluated in anonymous form. Data protection is always guaranteed. If you want to, you can use imaginary names.‘** _____	
202a (B/P) (ZP/Px)	Partner's sex INT: Based on the name, determine and note the partner's sex! If the name is unclear or if the respondent does not provide it, please ask the partner's sex: (PROG: green) **„Please give me your partner's sex.“** 1: male 2: female 7: Declined 8. Don't know **PROG: update auxiliary variable(s):** H1: female partner (0=male | unknown, 1=female) 0 if: (202a=1) | (201|202a=7|8) 1 if: (202a=2) H3: Hetero relationship (0=no, 1=yes | unknown) 0 if: (g1=2 & 202a=2) | (g1=1 & 202a=1) 1 if: (g1=2 & 202a=1) | (g1=1 & 202a=2) | (201|202a=7|8)	204_y

203_y (B/P) (ZP/Px)	H2=1 [Baseline sample module] & H10|H11=1 [unknown marriage/civil union] **(H10=1): In what year did you regiser your partnership? Please give me the year.** **(H11=1): When did you marry? Please give me the year.** PROG: designation of year most not be set before respondent's year of birth (Question 2). PROG: set max. value of year to [2017]. year: _ _ _ _ 9997: Declined 9998: Don't know	
204_y (B/P) (ZP/Px)	H2=1 [Baseline sample module] & H10|H11|H12=1 [unknown marriage/civil union/nonmarital cohabition] **And when did you start to be a couple? Please give me the month and the year.** PROG: designation of year most not be set before respondent's year of birth (Question 2). PROG: set max. value of year to [2017]. year: _ _ _ _ 9997: Declined 9998: Don't know	
205 (B/P) (ZP/Px)	H2=1 [Baseline sample module] & H10|H11|H12=1 [unknown marriage/civil union/nonmarital cohabition] **Do you live together with your partner?** INT: Only explain upon request: What is important here is the individual's personal impression! If the couple lives together the majority of the time, please answer "yes." 1: Yes 2: No 7: Declined 8: Don't know --- Proxy=0 [TP] --- Proxy>0 [Proxy] & 200=2|7 [separ, CU separ] --- Proxy>0 [Proxy] & 200=3|8 [divor, CU annul] --- Proxy>0 [Proxy] & 200=4|9 [widowed, CU deceased] --- Proxy>0 [Proxy] & 200=1|5|6 [married, single, CU] **PROG: update auxiliary variable:** H30: LAT (0=no, unknown, no partner, 1=yes) 1 if: 205=2 0 if: 205=1|7|8	--- 210 --- 251_y --- 250_y --- 252_y --- P2
	PROG: Timestamp	

Stable Partnership Module: unknown marriage, civil union, nonmarital cohabition		
210 (B/P) (ZP)	**PROG: timestamp** Proxy=0 [TP] & H10|H11|H12=1 [unknown marriage /civil union/nonmarital cohabition] **Please give me the year of birth of [your current partner / spouse]>.** PROG: set max. value of year to [2017]. _ _ _ _ 9997: Declined 9998: Don't know	
211 (B/P) (ZP)	Proxy=0 [TP] & H10|H11|H12=1 [unknown marriage/civil union/nonmarital cohabition] **Is [your partner / spouse] of the same nationality as you?** INT: record 'yes', if the partner is at least of the same nationality as the respondent. 1: Yes 2: No 7: Declined 8: Don't know	
212 (B/P) (ZP)	Proxy=0 [TP] & H10|H11|H12=1 [unknown marriage/civil union/nonmarital cohabition] **I would now like to talk about [your partner's / spouse's] working life. Let's begin with school.** **Where did your partner last attend school? Was it ...** INT: Read out examples 1-4! 1: in one of the states (Laender) of the former Federal Republic of Germany (West Germany) incl. West Berlin 2: in the former German Democratic Republic incl. East Berlin (East Germany) 3: in one of the formerly (pre-WWII) Eastern territories of Germany --- 4: or in another country? 7: Declined 8: Don't know	213 --- 214
213 (B/P) (ZP)	Proxy=0 [TP] & H10|H11|H12=1 [unknown marriage/civil union/nonmarital cohabition] & 212=1 | 2 | 3 [school attendance of partner in Dt./DDR] **With the aid of the lis, please tell me the highest level of school leaving qualification [your partner / spouse] has.** INT: Show list 213! One response only! 1: A Special Needs School 2: B Lower Secondary School (Hauptschule, Volksschule) 3: C Intermediate Secondary School (Realschule, Lyzeum) 4: D Polytechnic Secondary School, 8th Grade 5: E Polytechnic Secondary School, 10th Grade 6: F Qualification for Applied Upper Secondary Studies (Fochhochschulreife) 7: G Upper Secondary School (Gymnasium / Extended Upper School / Vocational School with Abitur Exam) 8: H Other (please note): _____	

	9: J Did not attain any school-leaving certificate 97: Declined 98: Don't know	 216
214 (B/P) (ZP)	Proxy=0 [TP] & H10|H11|H12=1 [unknown marriage/civil union/nonmarital cohabition] & 212=4 | 7 | 8 [school attendance of partner in other country or missing] **How many years did [your partner / spouse] attend school?** **_ _ years** 97: Declined 98: Don't know	
215 (B/P) (ZP)	Proxy=0 [TP] & H10|H11|H12=1 [unknown Marriage/civil union/nonmarital cohabition] & 212=4 | 7 | 8 [school attendance of partner in other country or missing] **With what kind of certificate did** [your partner / spouse] **obtain upon completion of school? Did** [your partner / spouse] INT: Read out examples 1-3! 1: leave school without obtaining a school-leaving certificate 2: complete compulsory schooling with a school-leaving certificate 3: or complete further secondary education with a school-leaving certificate? 7: Declined 8: Don't know	
216 (B/P) (ZP)	Proxy=0 [TP] & H10|H11|H12=1 [unknown Marriage/civil union/nonmarital cohabition] **Did [your partner / spouse] >undergo vocational training or higher education in Germany?** INT: Show list 216! One response only! 1: Yes, only in Germany (including the former German Democratic Republic (East Germany) and the Federal Republic of Germany (former West Germany)) 2: Yes, in Germany and in another country --- 3: No, in a country other than Germany --- 4: No vocational education/training or higher education 7: Declined 8: Don't know	 217 --- 218 --- 220
217 (B/P) (ZP)	Proxy=0 [TP] & H10|H11|H12=1 [unknown Marriage/civil union/nonmarital cohabition] & 216=1 | 2 [vocational training partner in Dt./DDR] **And what is the highest level of vocational education/training [your partner / spouse] has completed?** INT: Show list 217! One response only! A: Semi-skilled worker training B: Apprenticeship C: Full-time vocational school (Berufsfachschule, Handelsschule) D: Trade or technical school for vocational education (Meiserschule, Technikerschule, etc.) E: University of Applied Sciences (Fachhochschule) F: University, Technical University, other institution of higher education G: Other completed education/training (please note): _____	

	H: No completed vocational education/training 97: Declined 98: Don't know	220
218 (B/P) (ZP)	Proxy=0 [TP] & H10|H11|H12=1 [unknown Marriage/civil union/nonmarital cohabition] & 216=3 [vocational training partner in Dt./DDR] **What kind of training was it? Please name only the highest level of vocational training [your partner / spouse] has.** INT: Show list 218! One response only! A: Partner received in-firm training B: Partner completed an in-firm apprenticeship C: Partner attended vocational training school D: Partner attended a university E: Other 97: Declined 98: Don't know	220
	PROG: timestamp	
	Partnership Module 'Occupation': (un)known marriage, civil union, nonmarital cohabition	
	PROG: Timestamp	
219 (P) (ZP)	Proxy=0 [TP] & H2=0 [Panel sample module] & H14|H15=1 & D24=1 [known (marriage) partner in retirement] & hc281a=1 [Partnership still exist] **From the last interview it is provided that [your partner / spouse] is retired? Is this right?** INT: upon request: Retirement means that the partner receives retirement or pension annuity. 1: Yes --- 2: No --- 7: Declined 8: Don't know	231 --- 220 --- 220
220 (B/P) (ZP)	Proxy=0 [TP] & H10|H11|H12=1 [unknown Marriage/civil union/nonmarital cohabition] | (H14|H15=1 & D24=0 & hc281a=1 [known (marriage)partner not in retirement., unknown]) | (H14|H15=1 & D24=1 & 219=2|7|8 & hc281a=1 [known (marriage)partner, corrected, unknown]) **Is [your partner / spouse]employed at the moment? What on this lis applies to [your partner / spouse] ?** INT: Show list 214! One response only! A: Employed --- B: In early retirement C: Retired D: Unemployed E: In occupational training/re-training F: On maternity/childcare leave G: Not employed (homemaker)	221 --- 226a

	H: Other (please note): _____ 97: Declined 98: Don't know	--------- 240
221 (B/P) (ZP)	Proxy=0 [TP] **&** 220=A [Partner employed] **What is [his / her] current occupational status?** INT: Show Blue Card! Only include occupational status in primary occupation! Code number: _ _ 97: Declined 98: Don't know Code number=52|53|63 --- Code number (≠52|53|63) | (=97|98)	 222 --- 223
222 (B/P) (ZP)	Proxy=0 [TP] & 220=A [Partner employed] & 221=52|53|63 **Does [he / she] hold a managerial position there?** INT: please read upon request: (PROG: green)**: 'managerial position means that person work according to your instructions.'** 1: Yes 2: No 7: Declined 8: Don't know	
223 (B/P) (ZP)	Proxy=0 [TP] & 220=A [Partner employed] **What kind of work does [he / she] do at the moment? Please ofcribe the job exactly.** Prog: Provide 120 characters. occupation : _____ 7: Declined 8: Don't know	
224 (B/P) (ZP)	Proxy=0 [TP] & 220=A [Partner employed] **Is there a special name for this occupation?** Job: _____ 7: Declined 8: Don't know	
225 (B/P) (ZP)	Proxy=0 [TP] & 220=A [Partner employed] **About how many hours per week does [he / she] work including overtime?** PROG: allow three digit designation. PROG: allow max. value of hours 168 : **Hours per week _ _** 997: Declined 998: Don't know	 240

226a (B/P) (ZP)	Proxy=0 [TP] & 220=B|C|D|E|F|G|H [Partner not employed] Up to what year was **[your current partner / spouse]** employed or hasn't <he /she> ever been employed? PROG: set max. value of year to [2017]. Up to the year_ _ _ _ 9997: Declined 9998: Don't know --- 9995: Never been employed	 227 --- 240
227 (B/P) (ZP)	Proxy=0 [TP] & 220=B|C|D|E|F|G|H [Partner not employed] **What was [your current partner's / spouse's] last occupational status?** INT: Show Blue Card! Only include occupational status in primary occupation! Code number: _ _ 97: Declined 98: Don't know Code number=52|53|63 --- Code number (≠52|53|63) | (=97|98)	 228 --- 229
228 (B/P) (ZP)	Proxy=0 [TP] & 220=B|C|D|E|F|G|H [Partner not employed] & 227=52|53|63 **Did [he /she] hold a managerial position there?** INT: please read upon request: (PROG: green)**: 'managerial position means that person work according to your instructions.'** 1: Yes 2: No 7: Declined 8: Don't know	
229 (B/P) (ZP)	Proxy=0 [TP] & 220=B|C|D|E|F|G|H [Partner not employed] **What kind of work did [he /she] do there before leaving? Please describe the job exactly.** PROG: provide 120 characters. Occupation: _____ 7: Declined 8: Don't know	
230 (B/P) (ZP)	Proxy=0 [TP] & 220=B|C|D|E|F|G|H [Partner not employed] **Is there a special name for this occupation?** Job: _____ 7: Declined 8: Don't know ---	 ---

	220=C [Partner in pension/ retired person] --- 220=B, D-H [Partner not in pension/ retired person]	231 --- 240
231 (B/P) (ZP)	Proxy=0 [TP] & 219=1 [known Partner, who is already retired] | (220=C [pensioneer/retired person] & 226a≠9995 [ever employed]) **Sometimes pensioners and retirees keep working after retirement. What about your partner: Is [he/she] working at the moment?** 1: Yes 2: No 7: Declined 8: Don't know	 240
	PROG: timestamp	
Partnership Module: (un)known marriage, civil union, nonmarital cohabition		
	PROG: Timestamp	
240 (B/P) (ZP)	Proxy=0 [TP] & H13=0 [current marriage, civil union, nonmarital cohabition] **How would you rate your current relationship overall?** INT: Show Orange list A! 1: Very good 2: Good 3: Average 4: Bad 5: Very bad 7: Declined 8: Don't know	
241 (B/P) (ZP)	H13=0 [current marriage, civil union, nonmarital cohabition] **How close do you feel with your [partner/spouse]?** INT: Show blue lis C! 1: very close 2: close 3: moderately close 4: not very close 5: not close at all 7: Declined 8: Don't know	
242 (B/P) (ZP)	Proxy=0 [TP] & H13=0 [current marriage, civil union, nonmarital cohabition] **How often are you and your [partner/spouse] annoyed or angry with each other?** INT: show blue lis D! 1: Never 2: Seldom 3: Sometimes 4: Often 5: Always 7: Declined	

	8: Don't know H30=0 [Co-residence with partner or co-residence unknown] --- H30=1 [LAT partner]	 243 --- 245
243 (B/P) (ZP)	Proxy=0 [TP] & H13=0 [current marriage, civil union, nonmarital cohabition] & H30=0 [Co-residence with partner or co-residence unknown] **Now I would like to ask which one of you does the housework. Who is mainly responsible for tasks like cooking meals, washing dishes, doing laundry, cleaning, and buying groceries?** **Please select your answer from this list.** INT: Show lis 243! 1: Mainly me 2: Both my partner and I, equally often 3: Mainly my partner --- 4: Mainly another person in the household 5: Mainly another person who does not live in the household (DSTICH=0 [Panel sample]): answer button 6: Does not apply, nursing home --- 7: Declined --- 8: Don't know	 244 --- 245 --- 245 --- 244
244 (B/P) (ZP)	Proxy=0 [TP] & H13=0 [current marriage, civil union, nonmarital cohabition] & H30=0 [Co-residence with partner or co-residence unknown] & 243=1 | 2 | 3 | 8 [not task by third parties] **How satisfied are you with the division of responsibilities between you and your [partner / spouse] in the household?** INT: Show list 244! 1: Very satisfied 2: Satisfied 3: Half / half 4: Unsatisfied 5: Very unsatisfied (DSTICH=0 [Panel sample]): answer button 6: Does not apply, nursing home 7: Declined 8: Don't know	
245 (B/P) (ZP)	Proxy=0 [TP] & H13=0 [current marriage, civil union, nonmarital cohabition] **How would you rate your [partner's/spouse's] present state of health?** INT: Show Orange list A! 1: Very good 2: Good 3: Average 4: Bad 5: Very bad 7: Declined 8: Don't know	

	H2=1 [Baseline sample module] & 200=2|7 [separated, civil union:separated] & H30=0 [no LAT, unknown]	251_y
	H2=1 [Baseline sample module] & 200=3|8 [divorced/parted] & H30=0 [no LAT, unknown]	250_y
	H2=1 [Baseline sample module] & 200=4|9 [widowed/bereaved partner] & H30=0 [no LAT, unknown]	252_y
	H2=1 [Baseline sample module] & 200=1|6 [married, civil union] & H30=0 [no LAT, unknown]	270
	H2=1 [Baseline sample module] & 200=5 [single] & H30=0 [no LAT, unknown]	272
	H2=0 [Panel sample module] & H30=0 [no LAT, unknown]	P2
	H30=1 [LAT]	246Check
	PROG: timestamp	
	LAT module: **To all respondents with partners, but no shared household**	
246Check (B/P) (ZP)	Proxy=0 [TP] & H30=1 [LAT partner] **The previous survey shows that you do not live in a shared household with your [partner/spouse]. Did I note that down correctly?** 1: Yes, correctly noted (INT: target person does not live with his/her partner in a shared household)	246
	2: No, the target person lives with a partner/spouse in a shared household 3: No, the tarhet person has no partner 7: Declined 8: Don't know	
	H2=1 [Baseline sample module] & 200=2|7 [separated, civil union:separated]	251_y
	H2=1 [Baseline sample module] & 200=3|8 [divorced/parted]	250_y
	H2=1 [Baseline sample module] & 200=4|9 [widowed/bereaved partner]	252_y
	H2=1 [Baseline sample module] & 200=1|6 [married, civil union]	270
	H2=1 [Baseline sample module] & 200=5 [single]	272
	H2=0 [Panel sample module]	P2
246 (B/P) (ZP)	Proxy=0 [TP] & H30=1 [LAT partner] & 246Check=1 [H30 confirmed] **If you consider your life circumstances and those of your [partner/spouse] as a whole, how easy would it be to organize within the next three years?** INT: Show list 246! 1: It would be very easy. 2: It would be quite possible. 3: It would be quite difficult. 4: It is almost impossible.	

	7: Declined 8: Don't know --- PROG: Button 96: My partner lives in a retirement home or similar. --- H2=1 [Baseline sample module] & 200=2|7 [separated, civil union:separated] --- H2=1 [Baseline sample module] & 200=3|8 [divorced/parted] --- H2=1 [Baseline sample module] & 200=4|9 [widowed/bereaved partner] --- H2=1 [Baseline sample module] & 200=1|6 [married, civil union] --- H2=1 [Baseline sample module] & 200=5 [single] --- H2=0 [Panel sample module]	247 --- --- 251_y --- 250_y --- 252_y --- 270 --- 272 --- P2
247 (B/P) (ZP)	Proxy=0 [TP] & H30=1 [LAT partner] & 246Check=1 [H30 confirmed] **And regardless of your life circumstances, how much do you wish to live in a common household with your current [partner/spouse]?** INT: Show list 247! 1: I want it very much. 2: I want it a little. 3: I would rather not. 4: I do not want it. 7: Declined 8: Don't know	
248 (B/P) (ZP)	Proxy=0 [TP] & H30=1 [LAT partner] & 246Check=1 [H30 confirmed] **What would you say, how much you want your [partner/spouse] to live with you in a shared household** INT: Show list 248! 1: He / she wants it very much. 2: He / she wants it a little. 3: He / she wants it rather not. 4: He / she does not want it at all. 7: Declined 8: Don't know	
249 (B/P) (ZP)	Proxy=0 [TP] & H30=1 [LAT partner] & 246Check=1 [H30 confirmed] **And how often do you meet each other on average?** INT: This refers to personal face-to-face contact, not Skype or similar. INT: Show list A! 1: Daily 2: Several times a week 3: Once a week 4: 1 to 3 times a month	

	5: Several times a year 6: Less often 7: Never 97: Declined 98: Don't know --- H2=1 [Basismodul] & 200=2|7 [separated, civil union:separated] --- H2=1 [Basismodul] & 200=3|8 [divorced/parted] --- H2=1 [Basismodul] & 200=4|9 [widowed/bereaved partner] --- H2=1 [Basismodul] & 200=1|6 [married, civil union] --- H2=1 [Basismodul] & 200=5 [single] --- H2=0 [Panel sample module]	--- 251_y --- 250_y --- 252_y --- 270 --- 272 --- P2
Basic module former marriage: All formerly married / civil union		
	PROG: timestamp	
250_y (B/P) (ZP/Px)	H2=1 [Baseline sample module] & 200=3| 8 [divorced | parted] (200=3 divorced] & H12=1 [nonmarital cohabition]): **Now I want to get to know something about your past relationships. Please think of your divorced spouse.** (200=8 [parted] & H12=1 [nonmarital cohabition]): **Now I want to get to know something about your past relationships. Please think of your civil union.** (200=3 [divorced]): **Since when have you been divorced? Please give me the year.** (200=8 [parted]): **When was your partnership dissolved? Please give me the year.** PROG: designation of year must not be set before respondent's year of birth (Question 2). PROG: set max. value to [2017]. year: _ _ _ _ 9997: Declined 9998: Don't know	
251_y (B/P) (ZP/Px)	H2=1 [Baseline sample module] & 200=2|3|7|8 [separated/divorced/parted] **(200=2 [separated] & H12=1 [nonmarital cohabition]): Now I want to get to know something about your past relationships. Please think of your spouse, from whom you live separated.** **(200=7 [separated civil union] & H12=1 [nonmarital cohabition]): Now I want to get to know something about your past relationships. Please think of your civil union.(All): In what year did you separate?** PROG: designation of year must not be set before respondent's year of birth (Question 2).. PROG: set max. value to [2017]. year: _ _ _ _ 9997: Declined 9998: Don't know	253_y

252_y (B/P) (ZP/Px)	H2=1 [Baseline sample module] & 200=4|9 [widowed/ bereaved partner] (200=4 [widowed] & H12=1 [nonmarital cohabition]): **Now I want to get to know something about your past relationships. Please think of your deceased spouse.** (200=9 [bereaved partner] & H12=1 [nonmarital cohabition]): **Now I want to get to know something about your past relationships. Please think of your deceased partner.** (200=4 [widowed]): **In what year did your spouse pass away?** (200=9 [bereaved partner]): **In what year did your partner pass away?** PROG: designation of year must not be set before respondent's year of birth (Question 2) PROG: set max. value to 2017. year: _ _ _ _ 9997: Declined 9998: Don't know	
253_y (B/P) (ZP/Px)	H2=1 [Baseline sample module] & 200=2|3|4|7|8|9 [divorced/separated/widowed/civil union separated/parted/bereaved partner] **(200=2|3|4):** **When did you marry?** **(200=7|8|9):** **In what year did you register your partnership?** PROG: designation of year must not be set before respondent's year of birth (Question 2). PROG: set max. value to [2017]. year: _ _ _ _ 9997: Declined 9998: Don't know --- H2=1 [Baseline sample module] & 200=2|3|4|7|8|9 [divorced/separated/widowed/civil union separated/parted/bereaved partner] & H13=1 [single/unknown] --- H2=1 [Baseline sample module] & (DStich=0 [Panel sample] & Proxy=0 [TP] & 200=2|3|4|7|8|9 [divorced/ separated/widowed/ civil union:separated/parted/ bereaved partner/] & H13=1 [single/unknown] --- H2=1 [Baseline sample module] & 200=2|3|4|7|8|9 [divorced/separated/widowed/civil union separated/parted/bereaved partner] & H13=0 [Partner] --- H2=1 [Basis sample module] & Proxy>0 [Proxy] & 200=2|3|4|7|8|9 [divorced/separated/widowed/civil union separated/parted/bereaved partner] & H13=0 [Partner] --- H2=1 [Basis sample module] & Proxy>0 [Proxy] & 200=2|3|4|7|8|9 [divorced/separated/widowed/civil union separated/parted/bereaved partner] & H13=0 [Partner]	--- 254 --- 270 --- 270 --- 273 --- P2
	PROG: Timestamp	
Baseline sample module 'Former marriage partner': all former married person without current partner		
	PROG: Timestamp	
254 (B) (ZP)	Proxy=0 [TP] & H2=1 [Baseline sample module] & (DStich=1 [Baseline sample] & 200=2|3|4|7|8|9 [divorced/separated/widowed/civil union separated/parted/bereaved partner] & H13=1|9 [single/unknown] (200=2|3|4): Was your previous spouse employed at the end of your marriage? What on this list would apply to your previous spouse at that time? (200=7|8|9): Was your previous partner employed at the end of your marriage? What on this	

	lis would apply to your previous partner at that time? INT: Show list 254! One response only! A: Employed --- B: In early retirement C: Retired D: Unemployed E: In occupational training/re-training F: On maternity/childcare leave G: Not employed (homemaker) H: Other (please note): _____ 97: Declined 98: Don't know	255 --- 259 --- 270
255 (B) (ZP)	Proxy=0 [TP] & 254=A [ex-marriage partner employed] What was his / her last occupational status at that time? INT: Show Blue Card! Only include occupational status in main job! Code number: _ _ 97: Declined 98: Don't know Code number=52|53|63 --- Code number (≠52|53|63) | (=97|98)	 256 --- 257
256 (B) (ZP)	Proxy=0 [TP] & 254=A [ex-marriage partner employed] & 255=52 | 53 | 63 Did he / she hold a managerial position there? INT: Please read out upon request: (PROG: green) „managerial position means that people work according to your instructions." 1: Yes 2: No 7: Declined 8: Don't know	
257 (B) (ZP)	Proxy=0 [TP] & 254=A [ex-marriage partner employed] (200=2|3|4): What kind of work did [he/she] last do there during your marriage? Please ofcribe the job exactly. (200=7|8|9): What kind of work did [he/she] last do there during your civil union? Please ofcribe the job exactly. Prog: Provide 120 characters. Occupation: _____ 7: Declined 8: Don't know	

258 (B) (ZP)	Proxy=0 [TP] & 254=A [ex-marriage partner employed] Is there a special name for this occupation? Job: _____ 7: Declined 8: Don’t know	 270
259 (B) (ZP)	Proxy=0 [TP] & 254=B|C|D|E|F|G|H [ex-marriage partner employed] (200=2|3|4): What was [he/she] last occupational status during your marriage? Please give me the appropriate code number. (200=7|8|9): What was [he/she] last occupational status during your civil union? Please give me the appropriate code number. INT: Show Blue Card! Only include occupational status in main job! (200=2|3|4): INT: If the partner was’t employed during marriage, use the button (200=7|8|9): INT: If the partner was’t employed during civil uion, use the button Code number: _ _ PROG: Button 96: never been employed 97: Declined 98: Don’t know Code number =52|53|63 --- Code number (≠52|53|63) | (=96|97|98)	 260 --- 261
260 (B) (ZP)	Proxy=0 [TP] & 254=B|C|D|E|F|G|H|97|98 [expartner not employed bzw. unknown] & 259=52|53|63 Did [he/she] hold a managerial position there? INT: Please read out upon request: (PROG: green) „managerial position means that people work according to his/her instructions.“ 1: Yes 2: No 7: Declined 8: Don’t know	
261 (B) (ZP)	Proxy=0 [TP] & 254=B|C|D|E|F|G|H [expartner not employed] (200=2|3|4): What kind of work did [he/she] last do during your marriage? Please ofcribe the job exactly. (200=7|8|9): What kind of work did [he/she] last do during your civil union? Please ofcribe the job exactly. Prog: Provide 120 characters. occupation: _____ 7: Declined 8: Don’t know	

262 (B) (ZP)	Proxy=0 [TP] & 254=B|C|D|E|F|G|H|97|98 [Expartner not employed bzw. unknown] Is there a special name for this occupation? Job: _____ 7: Declined 8: Don't know	 270
	PROG: Timestamp	
Baseline sample module 'Global questions to couple's biography'		
	PROG: Timestamp	
270 (B/P) (ZP)	Proxy=0 [TP] & H2=1 [Baseline sample module] & 200=1|2|3|4|6|7|8|9 [ver/separated/divorced/widowed/civil union/civil union separated/ parted/bereaved partner] (200=1|2|3|4): Forget your [200=1: **actual** | 200=2: still exising | 200=3|4: last**]** marriage for a moment: Have you been married before? (200=6|7|8|9): Forget your [200=6: **actual** | 200=7: still exising | 200=8|9: last**]** civil union for a moment: Have you lived in a civil union or been married before? 1: (200=1|2): No, this is my first marriage. (200=3|4): No, this was my first marriage (200=6|7): No, this is my first civil union resp. marriage (200=8|9): No, this was my first civil union resp. marriage --- 2: yes --- 7: Declined 8: Don't know	 272 --- 271 --- 272
271 (B/P) (ZP)	Proxy=0 [TP] & H2=1 [Baseline sample module] & 200=1|2|3|4|6|7|8|9 & 270=2 (200=1|2|3|4): **How many times have you been married before this?** **(200=6|7|8|9): How many times have you lived in a civil union resp. been married before this?** number: _ _ 997: Declined 998: Don't know **Update auxiliary varibale:** H20: number previous marriages =271 + 1 =1 if: 270=1	
272 (B/P) (ZP)	Proxy=0 [TP] & H2=1 [Baseline sample module] & hc200=1-9 [valide Angabe] **All in all: How many steady relationships did you have in your life? We think of relationship that lasted at least one year.** (200=1): **Please number among your** [270=1|7|8**: Current marriage |** 270=2: **Stated marriages]**. (200=6): **Please number among your** [270=1|7|8: **Current civil union |** 270=2: **Stated civil unions and marriages]**.	

	(200=2): **Please number among your** [270=1|7|8**: Marriage |** 270=2: **Stated marriages]** [H12=1: **As well as your current relationship].** (200=7): **Please number among your** [270=1|7|8**: Civil union|** 270=2: **Stated civil unions and marriages]** [H12=1: **As well as your current relationship].** (200=3|4): **Please number among your** [270=1|7|8**: last marriage |** 270=2: **Stated marriages]** [H12=1**: and your current marriage].** (200=8|9): **Please number among your** [270=1|7|8: **Last civil union** | 270=2: **Stated civil unions and marriages]** [H12=1: **As well as your current relationship].** (200=5 & H12=1): **Please number among your Current relationship.** Number: ____ 997: Declined 998: Don't know --- H2=1 [Baseline sample module] & H13=1 [single] & ((200=5 & 272>=1) | (200=2|3|4|7|8|9 & 272>H20) | 272=997|998 | ((270=7|8) | (271=997|998)) --- H2=1 [Baseline sample module] & H13=1 [single] & ((200=5 & 272=0) | (200=2|3|4|7|8|9 & 272<=H20)) --- H2=1 [Baseline sample module] & H10|H11|H12=1 [civil union, marriage, nonmarital cohabition]	--- 273 --- 290 --- P2
273 (B/P) (ZP/Px)	H2=1 [Baseline sample module] & H13=1 [single] & Proxy=0 [TP] & ((200=5 & 272>=1) | (200=2|3|4|7|8|9 & 272>H20) | (272=997|998 | ((270=7|8)) | (271=997|998)) Oder: (H2=1 [Basis sample modul] & H13=1 [single] & Proxy>0 [Proxy]) **Since when have you been without a steady relationship? Please give me the year.** PROG: designation of year must not be set before respondent's year of birth [Question 2]. PROG: set max. value to 2017. year: _ _ _ _ 9997: Declined 9998: Don't know --- Proxy=0 [TP] --- Proxy>0 [Proxy]	--- 290 --- P2
	PROG: timestamp	

Panel sample module: couple's biography for panel sample respondents		
	PROG: timestamp	
280a (P) (ZP/Px)	H2=0 [Panel sample module] & D23=1 [married, separated] **According to our information from the last interview in [im DLM DLJ], you were married, but lived separated of your spouse. Is that right?** 1: Yes --- 2: No 7: Declined 8: Don't know **PROG: update auxiliary variable(s):** H2: Baseline sample module 1 if: DSTICH=0 [Panel sample] & D21 & D22 & D23≠9 [complete preload] & (280a|280b|280c|280d=2|7|8) [wrong or unconfirmed preload]	 280aa --- 200
280aa (P) (ZP/Px)	H2=0 [Panel sample module] & D23=1 [married, separated] & 280a=1 [designation confirmed] **Was this marriage divorced in the meantime?** 1: Yes --- 2: No --- 7: Declined 8: Don't know D21=1 [Partner] --- D21=0 [no Partner]	 280ab --- 280ac --- 280c --- 280b
280ab (P) (ZP/Px)	H2=0 [Panel sample module] & D23=1 [married, separated] & 280a=1 [designation confirmed] & 280aa=1 **In what year was it divorced?** PROG: designation of year must not be set before respondent's year of birth [Question 2]. PROG: set max. value to 2017. year: _ _ _ _ 9997: Declined 9998: Don't know --- D21=1 [Partner] --- D21=0 [no Partner] --- 280ab<DLJ	 --- 280c --- 280b --- 280abCheck
280ab Check (P) (ZP/Px)	H2=0 [Panel sample module] & D23=1 [married, separated] & 280a=1 [designation confirmed] & 280aa=1 & 280ab<DLJ **Did I note that correctly: you were divorced in the year [280ab]?** --- 1: Yes, the year is correctly noted	 --- 284a

	--- 2: No, the year have to be corrected --- 7: Declined 8: Don't know	--- 280ab --- 284a
280ac (P) (ZP/Px)	H2=0 [Panel sample module] & D23=1 [married, separated] & 280a=1 [designation confirmed] & 280aa=2 **Does your latest spouse still live?** 1: Yes 2: No 7: Declined 8: Don't know --- D21=1 [Partner] --- D21=0 [no Partner]	 --- 280c --- 280b
280b (P) (ZP/Px)	H2=0 [Panel sample module] & D21=0 [no partner known] **According to our information, you did not live in a relationship at our last interview [in DLM DLJ]. Is that right?** 1: Yes --- 2: No 7: Declined 8: Don't know **PROG: update auxiliary variable(s):** H2: Baseline sample module 1 if: DSTICH=0 [Panel sample] & D21 & D22 & D23≠9 [complete preload] & (280a|280b|280c|280d=2|7|8) [wrong or unconfirmed preload]	 283a --- 200
280c (P) (ZP/Px)	H2=0 [Panel sample module] & ((D21=1 [known Partner] & D22=0 [unmarried]) | (D21=1 [known Partner] & D22=1 & D23=1 [married, separated])) **According to our information, you lived in a relationship at our last interview [in DLM DLJ]. Is that right?** 1: Yes --- 2: No 7: Declined 8: Don't know **PROG: update auxiliary variable(s):** H2: Baseline sample module 1 if: DSTICH=0 [Panel sample] & D21 & D22 & D23≠9 [complete preload] & (280a|280b|280c|280d=2|7|8) [wrong or unconfirmed preload] H15: known nonmarital cohabition 1 if: 280c=1	 281 --- 200

280d (P) (ZP/Px)	H2=0 [Panel sample module] & D21=1 [known Partner] & D22=1 & D23 =0 [married, living together] (H3=1 [Heterorelationship]): **According to our information, you were married at our last interview [in DLM DLJ]. Is that right?** (H3=0 [homorelationship]): **According to our information, you lived in a civil union at our last interview [in DLM DLJ]. Is that right?** 1: Yes --- 2: No 7: Declined 8: Don't know **PROG: update auxiliary variable(s):** H2: Baseline sample module 1 if: DSTICH=0 [Panel sample] & D21 & D22 & D23≠9 [complete preload] & (280a|280b|280c|280d=2|7|8) [wrong or unconfirmed preload] H14: known marriage/civil union 1 if: 280d=1	 281 --- 200
Update partnership		
281 (P) (ZP/Px)	H2=0 [Panel sample module] & 280c|280d=1 [relationship confirmed] **In what year was your partner born?** PROG: set max. value of year to 2017. year _ _ _ _ 9997: Declined 9998: Don't know	
281a (P) (ZP/Px)	H2=0 [Panel sample module] & 280c|280d=1 [relationship confirmed] **Does this relationship still exist?** 1: Yes --- 2: No D22=1 & D23=0 [known marriage partner] --- (D21=1 & D22=0) | (D21 & D22 & D23=1) [known illegitimate partner] --- 7: Declined 8: Don't know	 281b --- 282b --- 282a --- 284a
281b (P) (ZP/Px)	H2=0 [Panel sample module] & 280c|280d=1 [relationship confirmed] & 281a=1 [partner still actual] **Do you and your partner live together in a common household?** INT: Only explain upon request: What is important here is the individual's personal impression! If the couple lives together the majority of the time, please answer "yes." 1: Yes (D21=1 & D22=0) | (D21 & D22 & D23=1) [known illegitimate partner] ---	 281c_y ---

	Proxy=0 [TP] & D21=1 & D22=1 & D23=0 & D24=1 [known retired spouse]	219
	Proxy=0 [TP] & D21=1 & D22=1 & D23=0 & D24=0 [known not retired spouse or unknown]	220
	Proxy>0 [Proxy] D21=1 & & D22=1 & D23=0 [known spouse]	P2
	2: No 8: Don't know	
	(D21=1 & D22=0) | (D21 & D22 & D23=1) [known illegitimate partner]	281d
	Proxy=0 [TP] & D21=1 & D22=1 & D23=0 & D24=1 [known retired spouse]	219
	Proxy=0 [TP] & D21=1 & D22=1 & D23=0 & D24=0 [known not retired spouse or unknown]	220
	Proxy>0 [Proxy] D21=1 & & D22=1 & D23=0 [known spouse]	P2
	Update auxiliary variable: H30: LAT (0=no, unknown, no partner, 1=yes) 1 if: 281b=2 0 if: 281b=1|7|8	
281c_y (P) (ZP/Px)	H2=0 [Panel sample module] & ((D21=1 & D22=0) | (D21 & D22 & D23=1) [known illegitimate partner]) & 281a=1 [still actual] & 281b=1 [living together] **Since when have you been living together? Please give me the year.** PROG: designation of year must not be set before respondent's year of birth (Question 2). PROG: Set max. value of year to 2017. year: _ _ _ _ 9997: Declined 9998: Don't know	
281d (P) (ZP/Px)	H2=0 [Panel sample module] & ((D21=1 & D22=0) | (D21 & D22 & D23=1) [known illegitimate partner]) & 281a=1 [still actual] & (H3=1): **Did you marry this partner?** **(H3=0): Did you register as a civil union with this partner?** 1: Yes	281e_y
	2: No 7: Declined 8: Don't know	
	Proxy=0 [TP] & D24=1 [partner in retirement]	219
	Proxy=0 [TP] & D24=0 [partner not in retirement or unknown]	220
	Proxy>0 [Proxy]	P2
	Update auxiliary variable: H14: known marriage/ civil union 1 if: 281d=1	

281e_y (P) (ZP/Px)	H2=0 [Panel sample module] & ((D21=1 & D22=0) | (D21 & D22 & D23=1) [known illegitimate partner]) & 281a=1 [still actual] & 281d=1 [marriage] (**H3=1): In what year did you marry?** **(H3=0): In what year was the regisration?** PROG: designation of year must not set before year of birth. PROG: set max. value of year to 2017. year: _ _ _ _ --- 9997: Declined 9998: Don't know D24=1 [partner in retirement] --- D24=0 [partner not in retirement or unknown] --- Proxy>0 [Proxy] & 281e_y>=DLJ --- 281e_y<DLJ	281e_m --- 219 --- 220 --- P2 --- 281e_y Check
281e_y Check (P) (ZP/Px)	H2=0 [Panel sample modul] & ((D21=1 & D22=0) | (D21 & D22 & D23=1) [known illegitimate partner]) & 281a=1 [the still current] & 281d=1 [marriage] & 281e_y<DLJ **Did I note that down correctly:** (H3=1): **Did you get marry in the year [281e_y]?** (H3=0): **The registration took place in the year [281e_y]?** --- 1: Yes, the year is correctly noted --- 2: No, the year has to be corrected --- 7: Declined 8: Don't know	--- 284a --- 281e_y --- 284a
281e_m (P) (ZP)	Proxy=0 [TP] & H2=0 [Panel sample module] & ((D21=1 & D22=0) | (D21 & D22 & D23=1) [known illegitimate partner]) & 281a=1 [still actual] & 281d=1 [marriage] & 281e_y≠9997|9998 [valid marriage year] **And in what month?** month: _ _ _ _ 97: No, the year must be corrected 98: Don't know --- D24=1 [partner in retirement] --- D24=0 [partner not in retirement or unknown]	--- 219 --- 220

Module Dissoluted Partnerships		
282a (P) (ZP/Px)	H2=0 [Panel sample module] & 281a=2 [dissolving known partnership] & ((D21=1 & D22=0) | (D21 & D22 & D23=1) [known illegitimate partner]) (H3=1): **Were you married with this partner before your separation?** (H3=0): **Were you registered as a civil union with this partner before your marriage?** 1: Yes --- 2: No --- 7: Declined 8: Don't know	
282b (P) (ZP/Px)	H2=0 [Panel sample module] & 281a=2 [dissolving known civil union, marriage, partnership] **((D22=1 | 282a=1) & H3=1): How did this marriage end?** **((D22=1 | 282a=1) & H3=0): How did this civil union end?** **(((D21=1 & D22=0) | (D21 & D22 & D23=1)) & 282a=2|7|8): How did this partnership end?** INT: show lis 282b! 1: divorce 2: dissolution of the civil union (same-sex) --- 3: separation 4: partner's decease 7: Declined 8: Don't know	282c_y --- 282d_y
282c_y (P) (ZP/Px)	H2=0 [Panel sample modul] & 281a=2 [dissolving known civil union, marriage, partnership] & 282b=1|2 [divorce] (H3=1): **In what year was your divorce?** (H3=0): **In what year was the dissolution?** PROG: designation of year must not set before year of birth. PROG: set max. value of year to [2017]. PROG: The year can not be before the year of birth of the target person [question 2]. PROG: Set maximum value year to [2017]. year: _ _ _ _ --- Proxy=0 [TP] & 282c_y>=DLJ --- Proxy>0 [Proxy] & 282c_y>=DLJ --- Declined =9997 Don't know =9998 --- 282c_y<DLJ	--- 282c_m --- 282d_y --- 282d_y --- 282c_yCheck

282c_y Check (P) (ZP/Px)	H2=0 [panel sample modul] & 281a=2 [dissolving known civil union, marriage, partnership] & 282b=1|2 [divorce] & 282c_y<DLJ **Did I note it down correctly:** (H3=1): You were divorced in the year [282c_y]? (H3=0): Your registered civil partnership was cancelled? 1: Yes, the year is correctly noted --- 2: No, the year has to be corrected --- 7: Declined 8: Don't know	284a --- 282c_y --- 284a
282c_m (P) (ZP)	Proxy=0 [TP] & 282b=1|2 [divorce] & 282c_y≠9997|9998 [valid year of divorce] **And in what month?** month: _ _ 97: Declined 98: Don't know	
282d_y (P) (ZP/Px)	H2=0 [Panel sample module] & 281a=2 [dissolving known civil union, marriage, partnership] (282b=1|2|3): **In what year did you separate?** (282b=4): **In what year passed your partner away?** (282b=7|8): **In what year ended it?** PROG: designation of year must not be set before respondent's year of birth [Question 2]. PROG: set max. value to 2017. year: _ _ _ _ --- Proxy=0 [ZP] & 282d_y>=DLJ --- Proxy>0 [Proxy] & 282d_y>=DLJ --- Declined = 9997 Don't know = 9998 --- 282d_y<DLJ	--- 282d_m --- 283a --- 283a --- 282d_yCheck
282d_y Check (P) (ZP/Px)	H2=0 [Panel sample modul] & 281a=2 [dissolving known civil union, marriage, partnership] & 282d_y<DLJ **Did I note it down correctly:** (282b=1|2|3): **You separated in the year [282d_y]?** (282b=4): [H1=0: **Your partner passed away in the year [282d_y]?** (282b=7|8): **Your partnership ended in the year [282d_y]?** --- 1: Yes, the year is correctly noted --- 2: No, the year has to be corrected --- 7: Declined 8: Don't know	--- 284a --- 282d_y --- 284a

282d_m (P) (ZP)	Proxy=0 [TP] & H2=0 [Panel sample module] & 281a=2 [dissolving known partnership] & 288d_y≠9997|9998 [valid year of separation] **And in what month?** month: _ _ 97: Declined 98: Don't know	 283a
	New Partnership(s)	
283a (P) (ZP/Px)	H2=0 [Panel sample module] & (281a=2 [dissolving known partnership]) | (280b=1 [single]) (281a=2): **did you enter into a new steady relationship after this** [D22=1: **marriage**] [(D21=1 & D22=0) | (D21 & D22 & D23=1): **relationship]?** (280b=1): **Did you enter into a new steady relationship after the last interview?** 1: Yes --- 2: No Proxy=0 [TP] --- Proxy>0 [Proxy] --- 7: Declined 8: Don't know **PROG: update auxiliary variable(s):** H13: single 1 if: 283a=2	 283b_y --- 290 --- P2 --- 284a
283b_y (P) (ZP/Px)	{283a=1 [unknown Partnership]) | 283n1=1} (283a=1): **Now I want to get to know something about this relationship. If you had several relationships in the meantime, I would like you to think of the first one. When did you start to be a couple? Please give me the year.** **(283n=1 & if # ongoing interrelationship<=1): When did you start to be a couple? Please give me the year.** PROG: designation of year must not set before respondent's year of birth. PROG: set max. value of year to [2017]. Year: _ _ _ _ 9997: Declined 9998: Don't know --- 283b_y<DLJ	 --- 283b_yCheck

283b_y Check (P) (ZP/Px)	**{283a=1 [unknown partnership]) | 283n1=1} & 283b_y<DLJ** **Did I note it down correctly: This partnership started in the year [283b_y]?** --- 1: Yes, the year is correctly noted --- 2: No, the year has to be corrected --- 7: Declined 8: Don't know	---------- 284a ---------- 283b_y ---------- 284a
283c (P) (ZP/Px)	{283a=1 [unknown partnership]) | 283n1=1} **Are you still a couple?** 1: Yes --- 2: No --- 7: Declined 8: Don't know	283d ---------- 283g ---------- 284a
283d (P) (ZP/Px)	{283c=1 [unknown partnership, which still persistt]} **Can you give me the first name of your partner?** INT: If the respondent does not want to say the name, please point out the following text: (PROG: green) **„The data will be exclusively evaluated in anonymous form. Data protection is always guaranteed. If you want to, you can use imaginary names. "** _____	
283da (P) (ZP/Px)	{283c=1 [unknown partnership, which still persistt]} **Partner's sex** INT: Based on the name, determine and note the partner's sex! If the name is unclear or if the respondent does not provide it, please ask the partner's sex: (PROG: green) **„Please give me your partner's sex."** 1: male 2: female 7: Declined 8. Don't know **PROG: Update auxiliary variable(s):** H1: Female Partner 0 if: 283da=1|7|8 1 if: 283da=2 H3: heterorelationship 0 if: (g1=1 & 283da=1) | (g1=2 & 283da=2) 1 if: (g1=1 & 283da=2) | (g1=2 & 283da=1) | (283da=7|8)	
283e (P) (ZP/Px)	{283c=1 [unknown Partnership, which still persistt]} **Do you live together with your partner?** INT: Only explain upon request: What is important here is the individual's personal impression! If the couple lives together the majority of the time, please answer "yes."	

	1: Yes --- 2: No --- 7: Declined 8: Don't know **PROG: Update auxiliary variable:** H30: LAT (0=no, unknown, no partner, 1=yes) 1 if: 283e=2 0 if: 283e=1|7|8	283f_y --- 283g --- 283g
283f_y (P) (ZP/Px)	{283c=1 [unknown partnership, which still persists]} **Since when have you been living together? Please give me the year.** PROG: Designation of year must not set before respondent's year of birth [question 2]. PROG: Set max. value of year to [2017]. year: _ _ _ _ 9997: Declined 9998: Don't know	
283g (P) (ZP/Px)	{283a=1 [unknown Partnership] & 283e=1 [valid information for Koresidenz]} (H3=1): [**have** | 283c=2: **had]** **you married?** (H3=0): [**have** | 283c=2: **had]** **regisered in a civil union?** 1: Yes 283c=1 [unknown Partnership, which still persistts] --- 2: No 7: Declined 8: Don't know Proxy=0 [TP] & 283c=1 [unknown partnership, which still persists] --- Proxy>0 [Proxy] & 283c=1 [unknown Partnership, which still persists] --- 283c=2 [unknown Partnership, which doesn't still persists] **PROG: Update auxiliary variable(s):** H10: unknown civil union (0=no,1=yes) 1 if: 283c=1 & 283g=1 & H3=0 H11: unknown Ehe (0=no,1=yes) 1 if: 283c=1 & 283g=1 & H3=1 H12: unknown nonmarital cohabition (0=no,1=yes) 1 if: 283c=1 & 283g=2|7|8	283h_y --- 210 --- P2 --- 283k
283h_y (P) (ZP/Px)	{283c=1 [unknown Partnership, which still persists] & 283g=1 [Marriage]} (H3=1): **In what year did you marry?** (H3=0): **In what year was the regisration?** PROG: Designation of year must not set before respondent's year of birth [question 2]. PROG: Set max. value of year to [2017]. year: _ _ _ _ ---	283h_m ---

	9997: Declined 9998: Don't know --- Proxy>0 [Proxy] & 283h_y>=DLJ | 283h_y= 9997 | 283h_y= 9998 --- 283h_y<DLJ	210 --- P2 --- 283h_yCheck
283h_y Check (P) (ZP/Px)	{283c=1 [unknown Partnership, which still persists] & 283g=1 [marriage]} **&** 283h_y<DLJ **Did I note it down correctly:** (H3=1): **You married in the year [283h_y]?** (H3=0): **The registration took place in the year [283h_y]?** --- 1: Yes, the year is correctly noted --- 2: No, the year has to be corrected --- 7: Declined 8: Don't know	--- 284a --- 283h_y --- 284a
283h_m (P) (ZP)	Proxy=0 [TP] & {283c=1 [unknown Partnership, which still persistts] & 283g=1 [Marriage] & 283h_y≠9997|9998 [valid Year of marriage]} **And in what month?** month: _ _ 97: Declined 98: Don't know	210
283k (P) (ZP/Px)	{283c=2 [unknown Partnership, which doesn't still persistt]} How did this partnership end? INT: show lise 282b! 1: divorce 2: dissolution of the civil union (same-sex) --- 3: separation 4: partner's decease 7: Declined 8: Don't know	283l_y --- 283m_y
283l_y (P) (ZP/Px)	{283c=2 [unknown Partnership, which doesn't still persist] & 283k=1|2 [Divorce]} (H3=1): **In what year was your divorce?** (H3=0): **In what year was the dissolution?** PROG: Designation of year must not set before respondent's year of birth [question 2]. PROG: Set max. value of year to [2017]. year: _ _ _ _ --- Proxy=0 [TP] & 283l_y>=DLJ --- Proxy>0 [Proxy] & 283l_y>=DLJ ---	--- 283l_m --- 283m_y ---

	9997: Declined 9998: Don't know283l_y<DLJ --- 283l_y<DLJ	283m_y --- 283l_yCheck
283l_yCheck (P) (ZP/Px)	{283c=2 [unknown Partnership, which doesn't still persist] & 283k=1|2 [Divorce]} & 283l_y<DLJ **Did I note it down correctly:** (H3=1): **You got divorsed in the year [283l_y]?** (H3=0): **The civil union was dissolved in the year [283l_y]?** 1: Yes, the year is correctly noted --- 2: No, the year has to be corrected --- 7: Declined 8: Don't know	 284a --- 283l_y --- 284a
283l_m (P) (ZP)	Proxy=0 [TP] & {283c=2 [unknown Partnership, which doesn't still persist] & 283k=1|2 [Divorce] & 283l_y≠9997|9998 [valid year of divorce]} **And in what month?** month: _ _ 97: Declined 98: Don't know	
283m_y (P) (ZP/Px)	{283c=2 [unknown Partnership, which doesn't still persist]} (283k=1|2|3): **In what year did you separate?** (283k=4): **In what year did your partner decease?** (283k=7|8): **In what year ended it?** PROG: Designation of year must not set before respondent's year of birth (question 2). PROG: Set max. value of year to [2017]. year: _ _ _ _ --- Proxy=0 [TP] & 283m_y>=DLJ --- Proxy>0 [Proxy] & 283m_y>=DLJ --- 9997: Declined 9998: Don't know --- 283m_y<DLJ	 --- 283m_m --- 283n --- 283n --- 283m_yCheck
283m_y Check (P) (ZP/Px)	**{283c=2 [**unknown Partnership, which doesn't still persist**]} & 283m_y<DLJ** **Did I note it down correctly:** (283k=1|2|3): **You separated in the year [283m_y]?** (283k=4): **Your partner passed away in the year [283m_y]?** (283k=7|8): **Your partnership ended in the year [283m_y]?** ---	 ---

	1: Yes, the year is correctly noted --- 2: No, the year has to be corrected --- 7: Declined 8: Don't know	284a --- 283m_y --- 284a
283m_m (P) (ZP)	Proxy=0 [TP] & {283c=2 [unknown Partnership, which doesn't still persist] & 283m_y≠9997|9998 [Valid Year of separation]} **And in what month?** Month: _ _ 97: Declined 98: Don't know	
283n (P) (ZP/Px)	{283c=2 [unknown Partnership, which doesn't still persist]} **Did you have another steady relationship afterwards?** 1: Yes (if # ongoing interrelationship=1) → loop --- (if # ongoing interrelationship=2) → exit modul --- 2: No --- Proxy=0 [TP] --- Proxy>0 [Proxy] --- 7: Declined 8: Don't know **PROG: Update auxiliary variable(s):** H13: single 1 if: 283n=2	283b_y --- 284a --- --- 290 --- P2 --- 284a
Exit module (current relationship situation, if 2+ interrelations)		
284a (P) (ZP/Px)	H2=0 [Panel sample module] & (283n=1 & [# ongoing interrelationship=2]) | (283a|283n=7|8) | (280abCheck | 281e_yCheck | 282c_yCheck | 282d_yCheck 283b_yCheck | 283h_yCheck | 283l_yCheck | 283m_yCheck=1|7|8) **What's your civil status? Which of this lis applies to you?** INT: Show lis 200! INT: Please enter marital status ‚Married, living together with spouse' even if the spouse doesn't live in the household of the target person due to health or professional reasons. 1: Married, living together with spouse --- 2: Married, living separated from spouse --- 3: Divorced ---	284b_y --- 284b_y --- 284b_y ---

	4: Widowed --- 5: Single --- 6: Einseparatedagene Civil union, living together (same-sex) --- 7: Civil union, living separated (same-sex) --- 8: Civil union, dissolved (same-sex) --- 9: Civil union, partner deceased (same-sex) --- 97: Declined 98: Don't know **PROG: Update auxiliary variable(s):** H1: female partner (0=male | unknown, 1=female) 0 if: (g1=2 [Women] & 284a=1) | (g1=1 [Men] & 284a=6) | (284a=97|98) 1 if: (g1=1 [Men] & 284a=1) | (g1=2 [Women] & 284a=6) H3: Heterorelationship 0 if: (284a=6) 1 if: (284a=1) H10: unknown civil union 1 if: 284a=6 H11: unknown marriage 1 if: 284a=1	284b_y --- 284c --- 284b_y --- 284b_y --- 284b_y --- 284b_y --- 284c
284b_y (P) (ZP/Px)	H2=0 [Panel sample module] & 284a=1|2|3|4|6|7|8|9 [married/civil union/ divorced / widowed] Since when do you have this civil status? **Please tell me the year.** PROG: Designation of year must not set before respondent's year of birth (question 2). PROG: Set max. value of year to 2017. year: _ _ _ _ Proxy=0 [TP] --- Proxy>0[Proxy] & 284a =2|3|4|7|8|9 [separated /widowed/ divorced / former civil union] --- Proxy>0[Proxy] & 284a=1|6 [married /civil union] --- 9997: Declined 9998: Don't know 284a=2|3|4|7|8|9 [separated /widowed/ divorced / former civil union] --- 284a=1|6 [married / civil union]	

	month: _ _ 97: Declined 98: Don't know Proxy=0 [TP] & 284a=2|3|4|7|8|9 [separated/widowed/divorced/former civil union] --- Proxy=0 [TP] & 284a=1|6 [married /civil union]	 284c --- 284ea
284c (P) (ZP/Px)	H2=0 [Panel sample module] & 284a=2|3|4|5|7|8|9|97|98 [separated/widowed/divorced/former civil union/single/unknown] **Do you have a steady partner at the moment?** 1: Yes --- 2: No --- 7: Declined 8: Don't know **PROG: Update auxiliary variable(s):** H13: single 1 if: 284c=2|7|8 H12: unknown nonmarital cohabition 1 if: 284c=1	 284d --- 284h_y --- P2
284d (P) (ZP/Px)	H2=0 [Panel sample module] & 284a=2|3|4|5|7|8|9|97|98 [separated/widowed/divorced/former civil union/single/unknown] & 284c=1 [Partner]) **Can you give me the first name of your partner?** INT: If the respondent does not want to say the name, please point out the following text: (PROG: green) **„The data will be exclusively evaluated in anonymous form. Data protection is always guaranteed. If you want to, you can use imaginary names."** _____	
284da (P) (ZP/Px)	H2=0 [Panel sample module] & 284a=2|3|4|5|7|8|9|97|98 [separated/widowed/divorced/former civil union/single/unknown] & 284c=1 [Partner]) Partner's sex INT: Based on the name, determine and note the partner's sex! If the name is unclear or if the respondent does not provide it, please ask the partner's sex: (PROG: green) **„Please give me your partner's sex."** 1: male 2: female 7: Declined 8. Don't know **PROG: Update auxiliary variable(s):** H1 Female Partner 0 if: (g1=2 & 284a=1) | (g1=1 & 284a=6) | (284da=1) | (284a=97|98) | (284da=7|8) 1 if: (g1=1 & 284a=1) | (g1=2 & 284a=6) | (284da=2) H3 Heterorelationship 0 if: (284a=6) | (g1=1 & 284da=1) | (g1=2 & 284da=2) 1 if: (284a=1) | (g1=1 & 284da=2) | (g1=2 & 284da=1) | (284a=97|98) | (284da=7|8)	

284ea (P) (ZP/Px)	H2=0 [Panel sample module] & ((284a=2|3|4|5|7|8|9|97|98 [separated/widowed/divorced/former civil union/single/unknown] & 284c=1 [Partner]) | (284a=1|6 (married/civil union)]) **When did you start to be a couple? Please give me the year.** PROG: Designation of year must not set before respondent's year of birth (question 2). PROG: Set max. value of year to 2017. year: _ _ _ _ 9997: Declined 9998: Don't know	
284f (P) (ZP/Px)	H2=0 [Panel sample module] & ((284a=2|3|4|5|7|8|9|97|98 [separated/widowed/divorced/former civil union/single/unknown] & 284c=1 [Partner]) | (284a=1|6 (married/civil union)]) **Do you live together with your partner?** INT: Only explain upon request: What is important here is the individual's personal impression! If the couple lives together the majority of the time, please answer "yes." 1: Yes --- 2: No 7: Declined 8: Don't know Proxy=0 [TP] --- Proxy>0 [Proxy] **PROG: Update auxiliary variable:** H30: LAT (0=no, **unknown**, no partner, 1=yes) 1 if: 284f=2 0 if: 284f=1|7|8	284g_y --- 210 --- P2
284g_y (P) (ZP/Px)	H2=0 [Panel sample module] & 284f=1 [Koresidenz] & ((284a=2|3|4|5|7|8|9|97|98 [separated/widowed/divorced/former civil union/single/unknown] & 284c=1 [Partner]) | (284a=1|6 (married/civil union)]) **Since when have you been living together? Please give me the year.** PROG: Designation of year must not set before respondent's year of birth (question 2). PROG: Set max. value of year to 2017. year: _ _ _ _ 9997: Declined 9998: Don't know Proxy=0 [TP] --- Proxy>0 [Proxy]	210 --- P2
284h_y (P) (ZP/Px)	H2=0 [Panel sample module] & 284a=2|3|4|5|7|8|9|97|98 [separated/widowed/div./former civil union/single/unknown] & & 284c=2 [currently single] **Since when are you no longer in a partnership? Please tell me the year** PROG: Designation of year must not be set before respondent's year of birth (Question 2). PROG: set max. value to [2017].	

	Jahr: _ _ _ _ 9997: Declined 9998: Don't know Proxy=0 [TP] --- Proxy>0 [Proxy]	 290 --- P2
	PROG: Timestamp	
	Module for Singles	
	PROG: Timestamp	
290 (B/P) (ZP)	Proxy=0 [TP] & H13=1 [current single] & **hc200=1-9 [valid specification]** **How would you currently rate your life without a partner?** INT: Show Orange list A! 1: Very good 2: good 3: average 4: bad 5: very bad 7: Declined 8: Don't know	
291 (B/P) (ZP)	Proxy=0 [TP] & H13=1 [current single] & & **hc200=1-9 [valid specification]** **Would you like to find a partner?** INT: Please read out examples! 1: Yes 2: Not at the moment, but maybe sometime in the future --- 3: no 7: Declined 8: Don't know	 292 --- P2
292 (B/P) (ZP)	Proxy=0 [TP] & H13=1 [current single] & & **hc200=1-9 [valid specification]** & 291=1|2 [Wish to have a partner] **How would you rate the likelihood of you finding another partner?** INT: Please read out examples! 1: Very likely 2: Likely 3: Unlikely 4: Very unlikely 7: Declined 8: Don't know --- 291=1 [on search for a partner] --- 291=2 [not on search for a partner]	 --- 293 --- P2

293 (B/P) (ZP)	Proxy=0 [TP] & H13=1 [current single] & & **hc200=1-9 [valid specification]** & 291=1 [current Wish to have a partner] **Do you actively search for a partner at the moment?** 1: Yes --- 2: No 7: Declined 8: Don't know	294 --- P2
294 (B/P) (ZP)	Proxy=0 [TP] & H13=1 [current single] & & hc200=1-9 [valid specification] & 291=1 [current Wish to have a partner] & 293=1 [Search for a partner] **And how often are you busy searching a new partner?** INT: Show blue lis A! 1: Daily 2: Several times a week 3: Once a week 4: Between 1-3 times per month 5: A few times a year 6: Less than a few times a year 7: Never 97: Declined 98: Don't know	
	PROG: Timestamp	
P2 (B/P) (ZP/Px)	INT: Do not read out! Was there an interruption in the module partnership that lasted at least one minute? 1: Yes --- 2: No Proxy=0 [TP] --- Proxy>0 [Proxy]	P2a --- 300 --- 300px
P2a (B/P) (ZP/Px)	P2=1 [Unterbrechung] How long did this interruption last? Please give me the break in minutes. INT: If there were several interruptions please state the overall duration. INT: Please round up on whole minutes. PROG: Min. value: 1. _ _ _Minutes Proxy=0 [TP] --- Proxy>0 [Proxy]	300 --- 300px

Nr.	CHILDREN AND GRANDCHILDREN	Continue with
	PROG: Timestamp	
300px (P) (Px)	Proxy>0 [Proxy] INT: Only read the following reminder if the proxy had difficulties with taking over the respondent's perspective. (PROG: green) (Proxy=1): **Please bear in mind that you continue to answer the questions from the perspective of Mr / Ms [<NAME TP>]** (Proxy=2): **Please also bear in mind that the questions are formulated to address Mr / Ms [<NAME TP>].**	
300 (B/P) (ZP/Px)	(All other): **We further consider your privat situation.** **Do you have children? By this I mean kind of your own, children who have grown up or are growing up in your household, as well as any children who may no longer be alive.** INT: If children existing, ask: **And how many children do you have?** INT: Please ask respondent to state the number of child! Do not include child who died at birth! PROG: set number of child to max. 30. number: _ _ --- 95: No child 97: Declined 98: Don't know Proxy = 0[TP] --- Proxy > 0[Proxy]	 301 --- 318 --- 322a
301 (B/P) (ZP/Px)	300≠95|97|98 [has children] (300>1): **Now I would like to ask you some questions about these child.** **The simplest thing would be for you to first give me the child's first names. Please start with the first born oldest child.** (300=1): **Now I would like to ask you some questions about this child.** **The simplest thing would be for you to first give me the child's first name.** PROG if respondent has more than 8 child, please show INT after receiving the 8th child: INT: Inform the respondent that he / she cannot enter information on any more child: (PROG: green): **"The program unfortunately does not allow you to include the names of any more child, so we will continue on to other questions."** INT: Note the child's names on Person Card I. INT: Enter codes and first names. INT: If the respondent declines or does not know the child's name please read out the following: (PROG: green)**: „The name will be helpful in the following part of the interview to ensure about which person we talk. All data are evaluated exclusively in anonymous form. Data protection is fully and comprehensively guaranteed. If you want to, you can also use imaginary names."** 997: First name declined 998: First name unknown PROG: show scheduled child code, prohibit entering the same code. PROG: for the first four children ask questions from 302 to 316i (depending on filtering) If more than 4 Children, allow designation for further 4, see filter in Question 304a.	

301a (B/P) (ZP/Px)	300≠95|97|98 [respondent has child] (If more than one child and less than 8 children per code in 301 listed): **Did I note it correctly? You have [number of children listed per code in 301] childen?** (If only one child listed per code in 301): **Did I note it correctly? You have one child? Child?** (If more than 8 children listed per code in 301): **So you have a total of 8 [PROG: addition in brackets] or more than 8 children?** 1. yes 2: No 7: Declined 8: Don't know	 302 300 302
302 (B/P) (ZP/Px)	300≠95|97|98 [has children] Sex: **Let's talk about your child [child's first name]** INT: Please enter the person's sex.Only ask if the first name is not mentioned or the person's sex can not be clearly deduced from the first name. (PROG: green) **„please give me your child's sex."** 1: male 2: female 7: Declined 8: Don't know Proxy=0 [TP] Proxy>0 [Proxy]	 303 304
303 (B/P) (ZP)	Proxy=0 [TP] 300≠95|97|98 [has child] & {H13=0 & H3=1 [in heterosexual Partnership]} **Is [child's first name] ...** INT: Please read options aloud! 1: Your and your partner's biological child 2: Just your biological child (but not your partner's) 3: Your partner's biological child, but not your biological child 4: or an adopted or foster child? 7: Declined 8: Don't know	 304
303a (B/P) (ZP)	Proxy=0 [TP] 300≠95|97|98 [has child] & {H13=0 & H3=0 [with homosexual Partnership]} **Is [child's first name]…** INT: Please read options aloud! 2: your biological child 3: your partner's child 4: or an adopted or foster child?	

	7: Declined 8: Don't know	304
303b (B/P) (ZP)	Proxy=0 [TP] 300≠95|97|98 [has child] & H13=1 [single] **Is [child's first name] ...** INT: Please read options aloud! 2: your biological child 3: Your former partner's biological child, but not your biological child 4: or an adopted or foster child? 7: Declined 8: Don't know	 304
304 (B/P) (ZP/Px)	300≠95|97|98 [has child] **What year was [child's first name] born?** PROG: Designation of year of corporate children (303=1|2; 303a=2; 303b=2) must not be set before respondent's year of birth (Question 2). PROG: Set max. value of year to 2017. Year_ _ _ _ 9997: Declined 9998: Don't know	
304a (B/P) (ZP/Px)	300≠95|97|98 [has child] **Is [child's first name] still alive?** 1: Yes 304>=2002 [Child 2002 or born later]: for this Child --- 304>=2002 [Child 2002 or born later] & [this Child 5. or further Child] → next Child → if no next Child & Proxy = 0 [TP] → if no next Child & Proxy > 0 [Proxy] --- (304<=2001) | (304=9997|9998) [Child 2001 or born later or Year of birth unknown] → Proxy = 0 [TP] → Proxy > 0 [Proxy] (304<=2001) | (304=9997|9998) [Child 2001 or born later or Year of birth unknown] & [this Child 5. or further Child] --- 2: No --- 7: Declined → next Child → if no next Child & Proxy = 0 [TP] → if no next Child & Proxy > 0 [Proxy] --- 8: Don't know 304>=2002 [Child 2002 or born later] ---	 309 --- 302 316j 317 --- 305 308 314 --- 315 --- 302 316j 317 ---

	→ next Child → if no next Child & Proxy = 0 [TP] → if no next Child & Proxy > 0 [Proxy] --- (304<=2001) | (304=9997|9998) [Child 2001 or born earlier or Year of birth unknown]	302 316j 317 --- 314
305 (B/P) (ZP)	Proxy=0 [TP] 300≠95|97|98 [has children] & {(304<=2001) | (304=9997|9998) [Age of Child>=16 or Year of birth unknown]} & 304a=1 [Child alive] & [Child is not 5. or further Child] **Is [child's first name] currently:** INT: Please read options aloud! 1: In school/ occupational training --- 2: Employed 3: In (early) retirement 4: Unemployed 5: Or a homemaker? INT: Do not read aloud: PROG: Answer button 6: Other --- 7: Declined 8: Don't know	 307 --- 306 --- 307
306 (B/P) (ZP)	Proxy=0 [TP] 300≠95|97|98 [has children] & {(304<=2001) | (304=9997|9998) [Age of Child >=16 or Year of birth unknown]} & 304a=1 [Child alive] & [Child is not 5. or further Child] & 305=2|3|4|5|6 [employment status Child valid and not in Education]) INT: Show Blue Card! (305=2): **What is [child's first name]'s last occupational status?** (305=3|4|5|6): **What was [child's first name]'s last occupational status?** **Please give the appropriate code: _ _** INT: If respondent was never employed, then use button PROG: Antwortbutton 96: Never been employed 97: Declined 98: Don't know	
306a	Omitted.	
307 (B/P) (ZP)	Proxy=0 [TP] 300≠95|97|98 [has child] & {(304<=2001) | (304=9997|9998) [Age of Child >=16 or Year of birth unknown]} & 304a=1 [Child alive] & [Child is not 5. or further Child]) **What is [child's first name]'s marital status?** INT: Please read options aloud! INT: Please report divorced resp. widowed for child with terminated same-sex civil union (regisration dissolved resp. partner deceased). 1: single 2: married 3: separated 4: divorced	

	5: widowed 6: civil union 7: Declined 8: Don't know	
308 (B/P) (ZP/Px)	300≠95|97|98 [has children] & {(304<=2001) | (304=9997|9998) [Age of Child >=16 or Year of birth unknown]} & 304a=1 [Child alive] & [Child is not 5. or further Child] **How often are you in contact with [child's first name] (visits, letters, phone calls, SMS or e-mail)?** INT: Show Blue list A! 1: Daily 2: Several times a week 3: Once a week 4: Between 1-3 times per month 5: A few times a year 6: Less than a few times a year 7: Never 97: Declined 98: Don't know	
309 (B/P) (ZP/Px)	300≠95|97|98 [has children] & 304a=1 [Child alive] & [Child is not 5. or further Child]) **Does [child's first name] live in your house or household?** 1: Yes → Proxy = 0 [TP] → Proxy > 0 [Proxy] & (304<=2001) | (304=9997|9998) [Age of child >=16 or Year of birth unknown] → Proxy > 0 [Proxy] & 304>=2002 [Age of child <16] → next child → if no next child --- 2: No → Proxy = 0 [TP] → Proxy > 0 [Proxy] & (304<=2001) | (304=9997|9998) [Age of child >=16 or Year of birth unknown] → Proxy > 0 [Proxy] & 304>=2002 [Age of child <16] --- 7: Declined 8: Don't know	 313 314 302 317 --- 311 312 311a --- 312
310.	Omitted.	
311 (B/P) (ZP)	Proxy=0 [TP] 300≠95|97|98 [has children] & 304a=1 [Child alive] & [Child is not 5. or further Child] & 309=2 [Child not in HH respondent]) **When did you and [child's first name] stop living together?** PROG: If valide designation in 304: Designation of year must not be set before year of birth Child. PROG: Set max. value of year to 2017. year: _ _ _ _	

	9995: Never lived together 9997: Declined 9998: Don't know --- (304<=2001) | (304=9997|9998) [Age of Child >=16 or Year of birth unknown]	 --- 312
311a (B/P) (ZP/Px)	300≠95|97|98 [has children] & 304a=1 [Child alive] & 304>=2002 [Age of Child <16] & [Child is not 5. or further Child] & 309=2 [Child not in HH respondent]) **How often are you in contact with [child's first name] (visits, letters, phone calls, SMS or e-mail)?** INT: Show Blue list A! 1: Daily 2: Several times a week 3: Once a week 4: Between 1-3 times per month 5: A few times a year 6: Less than a few times a year 7: Never 97: Declined 98: Don't know	
312 (B/P) (ZP/Px)	300≠95|97|98 [has children] & 304a=1 [Child alive] & [Child is not 5. or further Child] & 309=2|7|8 [Child not in HH respondent or unknown]) **How far away does [child's first name] live from you at present?** INT: Show Blue list B! 1: in the neighbourhood 2: in the same town 3: in another town, but it can be reached within two hours 4: farther away, in Germany 5: farther away, abroad 7: Declined 8: Don't know --- Proxy=0 [TP] --- Proxy > 0 [Proxy] & (304<=2001) | (304=9997|9998) [Age of child >=16 or Year of birth unknown] Proxy > 0 [Proxy] & 304>=2002 [Age of child <16] → next child → if no next child	 --- 313 --- 314 302 317
313 (B/P) (ZP)	Proxy=0 [TP] 300≠95|97|98 [has children] & 304a=1 [Child alive] & [Child is not 5. or further Child]) **How close is your relationship with [child's first name]?** INT: Show Blue list C! 1: Very close 2: Close 3: Morately close 4: Not very close	

	5: Not close at all 7: Declined 8: Don't know	
313a (B/P) (ZP)	Proxy=0 [TP] 300≠95|97|98 [has children] & 304a=1 [Child alive] & [Child is not 5. or further Child]) **How often are you and [child's first name] annoyed or angry with each other?** INT: Show Blue list D! 1: Never 2: Seldom 3: Sometimes 4: Often 5: Always 7: Declined 8: Don't know ---------- 304>=2002 [Child 2002 or born later] → next Child → no next Child ---------- (304<=2002) | (304=9997|9998) [Child 2001 or born earlier or Year of birth unknown]	---------- 302 316j ---------- 314
314 (B/P) (ZP/Px)	300≠95|97|98 [has child] & {(304<=2001) | (304=9997|9998) [Age of Child >=16 or Year of birth unknown]} & 304a=1|8 [Child alive or respondent Don't know] **Does [child's first name] now have child?** INT: If respondent asks what is considered a child here: both biological child as well as child who grew up or are growing up with <child's first name>. No child who have already died. 1: Yes ---------- 2: No 7: Declined 8: Don't know → next child → if non next child & Proxy = 0 [TP] → if non next child & Proxy > 0 [Proxy]	 314a ---------- 302 316j 317
314a (B/P) (ZP/Px)	300≠95|97|98 [has children] & {(304<=2001) | (304=9997|9998) [Age of Child >=16 or Year of birth unknown]} & 304a=1|8 [Child alive or respondent Don't know] & 314=1 [Child has child])g **How many?** PROG: Max. value=50. – – → Proxy = 0 [TP] → Proxy > 0 [Proxy] → next child → no next child ----------	 316b 302 317

	--- 97: Declined 98: Don't know → next Child → no next child und Proxy = 0 [TP] → non ext child and Proxy > 0 [Proxy]	--- 302 316j 317
315 (B/P) (ZP/Px)	300≠95|97|98 [has children] & 304a=2 [Child died] **When did [child's first name] die?** year: _ _ _ _ 9997: Declined 9998: Don't know PROG: is valid designation in 304: year of death must not be smaller than year of birth. PROG: calculate here age of child at moment of death (315-304). PROG: Set max. value of year to 2017. PROG: 315-304>=16 [Age at death>=16] --- 315-304<16 [Age at death smaller 16] : → next Child → no next child & Proxy = 0 [TP] → non ext child & Proxy > 0 [Proxy] --- (304=9997|9998) &| (315=9997|9998) [Age at death unknown, because designation for Year of birth and/or Year of death missing]	 316 --- 302 316j 317 --- 316
316 (B/P) (ZP/Px)	300≠95|97|98 [has children] & 304a=2 [Child deceased] & {(315-304>=16) | (315-304=missing) [Age at death >=16 or Age at death unknown]} **Did [child's first name] have child who are still alive today?** INT: If respondent asks what is considered a child here: both biological child as well as child who grew up or are growing up with <child's first name>. No child who have already died. 1: Yes --- 2: No 7: Declined 8: Don't know → next Child → no next child & Proxy = 0 [TP] → no next child & Proxy > 0 [Proxy]	 316a --- 302 316j 317
316a (B/P) (ZP/Px)	300≠95|97|98 [has children] & 304a=2 [Child deceased] & {(315-304>=16) | (315-304=Missing) [Age at death >=16 or Age at death unknown]} & 316=1 [Child has Children] **How many? _ _** PROG: Max. value=50 → Proxy = 0 [TP] → Proxy > 0 [Proxy] → next Child → no next Child ---	 316b 302 317 ---

	97: Declined 98: Don't know → next Child → no next Child & Proxy = 0 [TP] → non next child & Proxy > 0 [Proxy]	 302 316j 317
316b (B/P) (ZP)	Proxy=0 [TP] 300≠95|97|98 [has child] & {314a>=1 | 316a>=1 [Child has | had Children]} ({314a=1 | 316a=1 [one Child]}): **Now I would like to ask you some questions about this grandchild.** **The simplest thing would be for you to first give me the child's first name.** INT: Note on Person Card II. INT: Enter code and first name. INT: if the respondent declines, please read out following text (PROG: green) **'The name will be helpful in the following part of the interview to ensure about which grandchild we talk. The data will be exclusively evaluated in anonymous form. Data protection is always guaranteed. If you want to, you can use imaginary names.'** 997: Name Declined 998: Name unknown --- ({314a>1 | 316a>1 [more than 1 Child]}): **Now I would like to ask you some questions about these grandchild.The simplest thing would be for you to first give me the grandchild's first names. Please start with the oloft grandchild.** INT: Note on Person Card II. INT: Enter code and first name. 997: Name Declined 998: Name unknown PROG: For all Children of Child ask Questions from 316c2. PROG: Show scheduled children code, prohibit same codes. PROG: if more than 15 grandchildren show following text after 15th grandchild: INT: After recording the 15th grandchild please explain: **'Because of the program I can only record 15 grandchild.I will now proceed to the other questions.'** INT: if the respondent declines, please read out following text (PROG: green) **'The name will be helpful in the following part of the interview to ensure about which grandchild we talk. The data will be exclusively evaluated in anonymous form. Data protection is always guaranteed. If you want to, you can use imaginary names.'**	 316c1 ----------

316d1 (B/P) (ZP)	Proxy=0 [TP] 300≠95|97|98 [has child] & {314a=1 | 316a=1 [Child has | had exactly 1 Child]} **What year was [grandchild's first name] born?** PROG: set limit down to 1900. PROG: Set max. value of year to 2017. – – – – 9997: Declined 9998: Don't know --- If 5th or further Child → next Child → no next Child	 --- 302 316j
316e1 (B/P) (ZP)	Proxy=0 [TP] 300≠95|97|98 [has child] & {314a=1 | 316a=1 [Child hat | hatte exakt 1 Child]} & [Child is not 5. or further Child] **Is [grandchild's first name] [child's first name]'s biological child?** 1: Yes 2: No 7: Declined 8: Don't know --- 304a=2 [Child already deceased]	 316f1 --- 316g1
316f1 (B/P) (ZP)	Proxy=0 [TP] 300≠95|97|98 [has child] & 304=1 [Child alive] & 314a=1 [Child has exactly 1 child] & [Child is not 5. or further Child]) **Does [grandchild's first name] live in the same household as [child's first name]?** 1: Yes 316d1>=2002 [grandchild 2002 or born later] --- 316d1<=2001 [grandchild 2001 or born earlier] --- 316d1=9997|9998 [no designation for grandchild's Year of birth] --- 2: No 7: Declined 8: Don't know	 316i1 --- 316h1 --- 316h1 --- 316g1
316g1 (B/P) (ZP)	Proxy=0 [TP] 300≠95|97|98 [has children] & {(304=1 [Child alive] & 314a=1 [Child has exactly 1 child] & 316f1≠1 [grandchild not in HH Child or Info missing] & [Child is not 5. or further Child])} |{(304=2 [Child deceased] & 316a=1 [Child has exactly 1 child] & [Child is not 5. or further Child])} **How far does [grandchild's first name] live from you at present?** INT: Show Green Lis! 1: In the same house or household 2: in the neighbourhood 3: in the same town	

	4: in another town, but it can be reached within two hours 5: farther away, in Germany 6: farther away, abroad 7: Declined 8: Don't know --- 316d1>=2002 [Grandchild 2002 or born later]	316h1 --- 316i1
316h1 (B/P) (ZP)	Proxy=0 [TP] 300≠95|97|98 [has child] & {314a=1 | 316a=1 [Child has | had exactly 1 child]} & [Child is not 5. or further Child] & 316d1<=2001 [Age of grandchild >=16]) **How often are you in contact with [grandchild's first name] (visits, letters, phone calls, SMS or e-mail?** INT: Show Blue list A! 1: Daily 2: Several times a week 3: Once a week 4: Between 1-3 times per month 5: A few times a year 6: Less than a few times a year 7: Never 97: Declined 98: Don't know	
316i1 (B/P) (ZP)	Proxy=0 [TP] 300≠95|97|98 [has child] & {314a=1 | 316a=1 [Child has | had exactly 1 child]} & [Child is not 5. or further Child]) **How close is your relationship with [grandchild's first name]?** INT: Show Blue list C! 1: Very close 2: Close 3: Morately close 4: Not very close 5: Not close at all 7: Declined 8: Don't know	
316i1a (B/P) (ZP)	Proxy=0 [TP] 300≠95|97|98 [has children] & {314a=1 | 316a=1 [Child has | had exactly 1 child]} & [Child is not 5. or further Child] **How often are you and [grandchild's first name] annoyed or angry with each other?** INT: Show blue list D! 1: Never 2: Seldom 3: Sometimes 4: Often 5: Always 7: Declined 8: Don't know	

	----------	----------
	→ next Child	302
	→ no next Child	316j
316c2 (B/P) (ZP)	Proxy=0 [TP] 300≠95|97|98 [has child] & {314a>=2 | 316a>=2 [Child has | had exactly 1 child]} Sex: **Let's talk about your grandchild [grandchild's first name].** INT: Please enter the person's sex. Only ask if the first name is ambiguous or not mentioned. **PROG: show text** „**Sex of the grandchild [first name grandchild]**" 1: male 2: female 7: Declined 8: Don't know	
316d2 (B/P) (ZP)	Proxy=0 [TP] 300≠95|97|98 [has child] & {314a>=2 | 316a>=2 [Child has | had exactly 1 child]} **What year was [grandchild's first name] born?** PROG: set limit down to 1900. PROG: Set max. value of year to 2017. year: _ _ _ _ 9997: Declined 9998: Don't know	
	----------	----------
	Child 1-4.: Child already deceased (304a=2)	316g2
	----------	----------
	this Child 5. or further Child	316c2
	----------	----------
	this Child 5. or further Child and no further grandchildren	
	→ next Child	302
	→ no next Child	316j
316e2 (B/P) (ZP)	Proxy=0 [TP] 300≠95|97|98 [has child] & 304=1 [Child alive] & 314a>=2 [Child has more than 1 child] & [Child is not 5. or further Child]) **Does [grandchild's first name] live in the same household as [child's first name]?** 1: Yes 2: No 7: Declined 8: Don't know	
	----------	----------
	→ next grandchild	316c2
	→ no furhter grandchild	316f3

316g2 (B/P) (ZP)	Proxy=0 [TP] 300≠95|97|98 [has children] & 304=2 [Child deceased] & 316a>=2 [Child has more than 1 child] **How far does [grandchild's first name] live from you at present?** INT: Show Green List! 1: In the same house or household 2: in the neighbourhood 3: in the same town 4: in another town, but it can be reached within two hours 5: farther away, in Germany 6: farther away, abroad 7: Declined 8: Don't know --- → next grandchild → no further grandchilden	--- 316c2 316f3
316f3 (B/P) (ZP)	Proxy=0 [TP] 300≠95|97|98 [Has children] & {314a>=2 | 316a>=2 [child has/ had more than 1 child]} (DStich=1 [Baseline sample]): If all child's children are registered → program random selection of grandchild (only for 1. To 4. Child). (DStich=0 [Panel sample]): When all child's children are registered, check, if combinations of preloads (eg. Year of birth child 1, sex child1, year of birth of child from child, sex child of child) exist within the preloads (D311 bis D314, D321 bis D324 …….44, which correspond to current asked 4 characteristics for a child (only for 1. To 4. Child).. Here apply following conditions: 1. The valid designations relating to sex and year of birth of child from 2017 correspond to the preload designations of one child Relevant preloads: D311, D321, D331, D341 (sex child 1 to 4) D312, D322, D332, D342 (year of birth of child 1 to 4) 2. For exactly one of the in 2017 mentioned children of this child correspond the current information for year of birth and sex to the information of the preload for the child identified as 1 Relevant preloads: D313, D323, D333, D343 (sex Grandchild Child 1 bis Child 4) D314, D324, D334, D344 (Year of birth Grandchild Child 1 bis Child 4) → If an exactly match succeed, the following questions will be used for the re-identificated grandchild. The name of the grandchild in the year 2017 will be shown, whose characteristics correspond to the characteristics of the grandchild in the preload. → If no exactly match succeed and no re-identification happened (because the combination of the four preload- designations on person-level don't fit to the current 4-combination of designation of year of birth and sex from child and grandchild or no preload- information is available) a random selection pass like in B2008 / DStich=1 [Baseline sample] (valid only for 1. to 4. Child). PROG (DStich=0 [Panel sample]): The program gives information in a variable, if the polled grandchild is out of the random selection or re-identification happened. Leading in numeration of this variable is the order of birth in the current survey (eg. The combination mentioned 2017 for child 2 und its child correspond to the perload information for child 1 and its child → variable is named after child2).	

	PROG: For this random selected or re-identified grandchild: **Now that we have talked about all of [child's first name]'s child, I would like to ask a few more questions about your grandchild [random grandchild's first name].** **Is [random grandchild's first name] a biological child of [child's first name]?** INT: explain upon request: „**The now closer requested grandchild was randomly selected by computer. The interviewer has no influence.** 1: Yes 2: No 7: Declined 8: Don't know --- 316e2=1 [grandchild is living in same household as child] & 316d2>=2002 [grandchild 2002 or born later] --- 316e2=1 [grandchild is living in same household as child] & 316d2=9997|9998 [grandchild's Year of birth is unknown] --- 316e2=1 [grandchild is living in same household as child] & 316d2<=2001 [grandchild 2001 or earlier born] --- 316e2=2|7|8 [grandchild is not living in same household as child or missing] --- 304a=2 [Child is deceased] & 316d2>=2002 [grandchild 2002 or born later] --- 304a=2 [Child is deceased] & 316d2=9997|9998 [no designation for grandchild's year of birth] --- 304a=2 [Child is deceased] &316d2<=2001 [grandchild 2001 or earlier born]	--- 316i3 --- 316h3 --- 316h3 --- 316g3 --- 316i3 --- 316h3 --- 316h3
316g3 (B/P) (ZP)	Proxy=0 [TP] **300≠95|97|98 [has children]& 314a>=2 [Child has more than 1 child] & 316e2≠1) [coincidental grandchild re-identificated grandchild not co-resident with child]** **How far does** [random grandchild's first name] **live from you at present?** INT: Show Green List! 1: In the same house or household 2: in the neighbourhood 3: in the same town 4: in another town, but it can be reached within two hours 5: farther away, in Germany: farther away, abroad 7: Declined 8: Don't know --- 316d2>=2002 [grandchild 2002 or born later] --- (316d2<=2001) | (316d2=9997|9998) [Grandchild 2001 or born earlier or no designation to Year of birth]	--- 316i3 --- 316h3
316h3 (B/P) (ZP)	Proxy=0 [TP] 300≠95|97|98 [has children] & {314a>=2 | 316a>=2 [Child has | had more than 1 child]} & {(316d2<=2001) | (316d2=9997|9998) [Age of Grandchild >=16 or no designation to Year of birth]} **How often are you in contact with [random grandchild's first name] (visits, letters, phone calls, SMS or e-mail)?**	

	INT: Show Blue list A! 1: Daily 2: Several times a week 3: Once a week 4: Between 1-3 times per month 5: A few times a year 6: Less than a few times a year 7: Never 97: Declined 98: Don't know	
316i3 (B/P) (ZP)	Proxy=0 [TP] 300≠95|97|98 [has child] & {314a>=2 | 316a>=2 [Child has | had more than 1 child]} **How close is your relationship with [First name random or re-identified grandson]?** INT: Show Blue list C! 1: Very close 2: Close 3: Morately close 4: Not very close 5: Not close at all 7: Declined 8: Don't know	
316i3a (B/P) (ZP)	Proxy=0 [TP] 300≠95|97|98 [has child] & {314a>=2 | 316a>=2 [Child has | had more than 1 child]} **How often are you and [grandchild'S first name] annoyed or angry with each other?** INT: Show Blue list D! 1: Never 2: Seldom 3: Sometimes 4: Often 5: Always 7: Declined 8: Don't know --- → next Child → no next Child --- **PROG: After recording <u>all</u> grandchildren of <u>all</u> children generate auxiliary varibale** Grandchild=1 if one designation for grandchild Grandchild=0 if no designation of grandchild --- Dummy Grandchild=1 Dummy Grandchild=0	--- 302 316j --- --- 316j 316k
316j (B/P) (ZP)	Proxy=0 [TP] 300≠95|97|98 [has children] & {(any 314=1) | (any 316=1) [min. 1 Child has | had Children]} **On the whole, how important is your role as a** **[2=1: grandfather | 2=2: grandmother] to you?**	

	INT: Show list 316! 1: Very important 2: Important 3: Not so important 4: Completely unimportant 7: Declined 8: Don't know	 317
316k (B/P) (ZP)	Proxy=0 [TP] 300≠95|97|98 [has child] & {(any 304 <=2001) | (any 304=9997|9998) [min 1 Child with Age >=16 or unknown Year of birth)]} & 304a=1|9998|9998[Child alive or Vitalstatus unknown] & {(all 314≠1) & (all 316≠1) [no Child has| had Children]} **On the whole, how important is it to you to become a [**2=1: **grandfather** | 2=2: **grandmother] in the future?** PROG: this Question only if Dummy Grandchild equals 0 and at least 1 Child 2001 or born earlier and alive (304a=1; or 304a=missing) or Dummy Grandchild equals 0 and at least 1 Child (304=missing) and alive (304a=1; or 304a=missing) INT: Show list 316! 1: Very important 2: Important 3: Not so important 4: Completely unimportant 7: Declined 8: Don't know	

317a (B/P) (ZP/Px)	300≠95|97|98 [has child] & {(any 314a>=1) | (any 316a>=1) [min 1 Child has | had Children]} & {(any 316d1|316d2<=2001) | (any 316d1|316d2=9997|9998) [min one Grandchild Age >=16 or no designation to Year of birth]} & 317=1 [has greatgrandchild] **How many?** – – 97: Declined 98: Don't know --- Proxy = 0 [TP] --- Proxy > 0 [Proxy]	 --- 318 --- 322a

Nr.	OTHER RELATIVES/ FURTHER RELATIVES	Continue with
318 (B/P) (ZP)	Proxy=0 [TP] **And do you have other living relatives? Please state whether you still have living relatives in each of the following categories.** INT: Show list 318! INT: Multiple responses possible! PROG: allow multiple choice! PROG: code n must not simultaneously mentioned with others. Items: 1: Yes 2: No 7: Declined 8: Don't know A: Brothers B: Sisers C Biological grandfather D: Biological grandmother E: Aunt / Uncle F: Cousins G: Nieces / Nephews H: Schwager Brother-in-law, siser-in-law / Siblings of partner J: Grandmother of partner K: Grandfather of partner L: Mother-in-law / mother of partner M: Father-in-law / father of partner N: No living relatives (from the categories in this lis) --- 318A=1 & 318B=0|1 [has brothers] --- 318A=0 & 318B=1 [has sisters but no brothers] --- 318A=0 & 318B=0 [has neither brothers nor sisters]	--- 318-1 --- 318-2 --- 319
318-1 (B/P) (ZP)	Proxy=0 [TP] 318A=1 [has brothers] **How many brothers do you have?** PROG: Min. value to 1. PROG: set Max. value to 25. – – 97: Declined 98: Don't know 318B=1[has sisters] --- 318B=0 [has no sisters]	 318-2 --- 319

318-2 (B/P) (ZP)	Proxy=0 [TP] 318B=1 [has sisters] **How many sisers do you have?** PROG: Min. value to 1. PROG: set Max. value to 25. – – 97: Declined 98: Don't know	 319
319 (B/P) (ZP)	Proxy=0 [TP] **How would you rate your relationship with your family overall at the moment?** INT: Show Orange list A! 1: very good 2: good 3: average 4: bad 5: very bad 7: Declined 8: Don't know 9: Not applicable	
320	Omitted.	
321	Omitted.	
322a (B/P) (ZP/Px)	DStich=1 [Baseline sample]: 322a=set 1 DStich=0 [Panel sample]: Respondent lives in... INT: Please note! 1: Private home 2: Retirement community (independent apartments ofigned aroand the needs of older people; Altenwohnheim) 3: Residential care home offering assised living (Betreutes Wohnen) 4: Senior citizens' residence (Seniorenresidenz) ---------- 5: Retirement home (home providing care for older people who are no longer able to maintain their own household but do not require a high degree of care; Altenheim) 6: Nursing home (home providing care for the chronically ill and/or people in need of a high degree of care; Pflegeheim) 7: Another type of home, not specifically defined	 323 ---------- 332

Nr.	HOUSEHOLD COMPOSITION AND HOUSING	Continue with
	PROG: Timestamp	
323 (B/P) (ZP/Px)	322a=1 | 2 | 3 | 4 [is living in self guided household]} **How many people in total live in your household, including child and yourself? Please include small child and people who normally live here but are absent at the moment (i.e., in the hospital or on vacation).** INT: Note number of people! INT: For single households use the button “I live alone”. PROG: allow a maximum of 25 Total of people: _ _ --- 95: I live alone 97: Declined 98: Don’t know	324 --- 332
324 (B/P) (ZP/Px)	{322a=1 | 2 | 3 | 4 [is living in self guided household] & 323≠95|97|98 [not living alone]} **I would like to get some information about the people who live in this household. About yourself you don’t need to make any statements.** **Please name all individuals who live in your household beside you.** INT: Enter code number from Person Card I or II for each person! If necessary add to Person Card! Also use first name to include the sex and individual code, also where there are missing items. INT: Please enter what applies to this person (e.g child 1=201, child 2=202, etc.) INT: If the respondent declines to state the name, please read out the following text: (PROG: green) „**The name will be helpful in the following part of the interview to ensure about which person we talk. All data are evaluated exclusively in anonymous form. Data protection is fully and comprehensively guaranteed. If you want to, you can also use imaginary names.”** PROG: Information already detected at HH members can be displayed on the screen, so that the target person can watch it. If first name unclear or declined, please ask respondent to state the sex. 2. Person: A: First name / note on person _____ --- 9997: Declined 9998: Don’t know --- B: Sex 1: Male 2: Female --- 7: Declined 8: Don’t know --- **Please show me what applies to this person:** INT: Show Yellow Person Cards I and II.	

	Code-Nr.: _ _ _ 997: Declined 998: Don't know	
324a (B/P) (ZP/Px)	{322a=1|2|3|4 [is living in self guided household] & 323≠95|97|98 [not living alone]} **Is there anyone else?** 1: Yes --- 2: No 7: Declined 8: Don't know	324b --- 324o1
324b (B/P) (ZP/Px)	{322a=1|2|3|4 [is living in self guided household] & 323≠95|97|98 [not living alone]} **Please tell me the first name of the next person.** INT: Also use first name to include the sex and individual code, also where there are missing items. INT: If the respondent declines to state the name, please read out the following text: (PROG: green) „**The name will be helpful in the following part of the interview to ensure about which person we talk. All data are evaluated exclusively in anonymous form. Data protection is fully and comprehensively guaranteed. If you want to, you can also use imaginary names."** If first name unclear or declined, please ask respondent to state the sex. 3. Person: A: First name / note on person _____ --- 9997: Declined 9998: Don't know --- B: Sex 1: Male 2: Female --- 7: Declined 8: Don't know --- **Please show me what applies to this person:** INT: Show Yellow Person Cards I and II. Code-Nr.: _ _ _ 997: Declined 998: Don't know PROG: by admission of further household members prohibit duplication for following person codes: 201–208, 301-330, 501–505.	

324c (B/P) (ZP/Px)	{322a=1 | 2 | 3 | 4 [is living in self guided household] & 323≠95|97|98 [not living alone]} **Is there anyone else?** 1: Yes --- 2: No 7: Declined 8: Don't know	324d --- 324o1
324d (B/P) (ZP/Px)	[322a=1 | 2 | 3 | 4 [is living in self guided household] & 323≠95|97|98 [not living alone]} **Please tell me the first name of the next person.** INT: Also use first name to include the sex and individual code, also where there are missing items. INT: If the respondent declines to state the name, please read out the following text: (PROG: green) „**The name will be helpful in the following part of the interview to ensure about which person we talk. All data are evaluated exclusively in anonymous form. Data protection is fully and comprehensively guaranteed. If you want to, you can also use imaginary names."** If first name unclear or declined, please ask respondent to state the sex. 4. Person: A: First name / note on person _____ --- 9997: Declined 9998: Don't know --- B: Sex 1: Male 2: Female --- 7: Declined 8: Don't know --- **Please show me what applies to this person:** INT: Show Yellow Person Cards I and II. Code-Nr.: _ _ _ 997: Declined 998: Don't know PROG: by admission of further household members prohibit duplication for following person codes: 201–208, 301-330, 501–505.	
324e (B/P) (ZP/Px)	{322a=1 | 2 | 3 | 4 [[is living in self guided household] & 323≠95|97|98 [not living alone]} **Is there anyone else?** 1: Yes --- 2: No	324f --- 324o1

	7: Declined 8: Don’t know	
324f (B/P) (ZP/Px)	{322a=1|2|3|4 [[is living in self guided household] & 323≠95|97|98 [not living alone]} **Please tell me the first name of the next person.** INT: Also use first name to include the sex and individual code, also where there are missing items. INT: If the respondent declines to state the name, please read out the following text: (PROG: green) „**The name will be helpful in the following part of the interview to ensure about which person we talk. All data are evaluated exclusively in anonymous form. Data protection is fully and comprehensively guaranteed. If you want to, you can also use imaginary names.”** If first name unclear or declined, please ask respondent to state the sex. 5. Person: A: First name / note on person _____ --- 9997: Declined 9998: Don’t know --- B: Sex 1: Male 2: Female --- 7: Declined 8: Don’t know --- **INT: Please show me what applies to this person:** INT: Show Yellow Person Cards I and II. Code-Nr.: _ _ _ 997: Declined 998: Don’t know PROG: by admission of further household members prohibit duplication for following person codes: 201–208, 301-330, 501–505.	
324g (B/P) (ZP/Px)	{322a=1|2|3|4 [[is living in self guided household] & 323≠95|97|98 [not living alone]} **Is there anyone else?** 1: Yes --- 2: No 7: Declined 8: Don’t know	324h --- 324o1
324h (B/P) (ZP/Px)	{322a=1|2|3|4 [[is living in self guided household] & 323≠95|97|98 [not living alone]} **Please tell me the first name of the next person.** INT: Also use first name to include the sex and individual code, also where there are missing items. INT: If the respondent declines to state the name, please read out the following text:	

	(PROG: green) „**The name will be helpful in the following part of the interview to ensure about which person we talk. All data are evaluated exclusively in anonymous form. Data protection is fully and comprehensively guaranteed. If you want to, you can also use imaginary names.”** **If first name unclear or declined, please ask respondent to state the sex**. 3. Person: A: First name / note on person _____ --- 9997: Declined 9998: Don’t know --- B: Sex 1: Male 2: Female --- 7: Declined 8: Don’t know --- **INT: Please show me what applies to this person:** INT: Show Yellow Person Cards I and II. Code-Nr.: _ _ _ 997: Declined 998: Don’t know PROG: by admission of further household members prohibit duplication for following person codes: 201–208, 301-330, 501–505.	
324i (B/P) (ZP/Px)	{322a=1|2|3|4 [[is living in self guided household] & 323≠95|97|98 [not living alone]} **Is there anyone else?** 1: Yes --- 2: No 7: Declined 8: Don’t know	324j --- 324o1
324j (B/P) (ZP/Px)	{322a=1|2|3|4 [[is living in self guided household] & 323≠95|97|98 [not living alone]} **Please tell me the first name of the next person.** INT: Also use first name to include the sex and individual code, also where there are missing items. INT: If the respondent declines to state the name, please read out the following text: (PROG: green) „**The name will be helpful in the following part of the interview to ensure about which person we talk. All data are evaluated exclusively in anonymous form. Data protection is fully and comprehensively guaranteed. If you want to, you can also use imaginary names.”** **If first name unclear or declined, please ask respondent to state the sex**. 3. Person: A: First name / note on person _____	

	--- 9997: Declined 9998: Don't know --- B: Sex 1: Male 2: Female --- 7: Declined 8: Don't know --- **INT: Please show me what applies to this person:** INT: Show Yellow Person Cards I and II. Code-Nr.: _ _ _ 997: Declined 998: Don't know PROG: by admission of further household members prohibit duplication for following person codes: 201–208, 301-330, 501–505.	
324k	Question 324k moved backwards 322a	
324l	Question 324l moved backwards.	
324m	Question deleted	
324n	Question deleted	
324o1 (B/P) (ZP/Px)	{322a=1|2|3|4 [lives in self-managed household] & 323≠95|97|98 [do not live alone]} **So far, I have noted down that besides you, the following people live with you in this household:** INT: Read out the displayed list of names! PROG: Display previously recorded names and person codes in a list form on the screen **Is this list complete or are there other persons in your household?** INT: If the respondent notifies you at this point that persons are mistakenly, e.g. double, noted, you may refer to the following: (PROG: green): We will talk again about people on the list who are not in your household. 1: List is complete --- 2. There are other people	324p --- 324o
324o (B/P) (ZP/Px)	**{324o1=2}** **Please name all other persons in your household.** INT: Enter first names and codes and add person named here to Person Card I or II if necessary. INT: If respondent does not wish to name the first name, read out the following text: (PROG: green) „**The name will be helpful in the following part of the interview to ensure about which person we talk. All data are evaluated exclusively in anonymous form. Data protection is fully and comprehensively guaranteed. If you want to, you can also use imaginary names."** INT: If first name unclear or declined, please ask respondent to state the sex.	

	PROG: Include up to 6 additional persons PROG: After recording each additional person leave the answer and set the answer box below for the next person Items: 1. additional person: First name _____ Code _ _ _ 997: Declined 998: Don't know PROG: enable button „no further person" from 2nd person Button „no further person" --- A total of 12 persons recorded	 324p --- 324k
324k (B/P) (ZP/Px)	**So far you have mentioned - except yourself - 12 persons live with you in the household. Are there any more people?** 1: Yes --- 2: No 7: Declined 8: Don't know	 324l --- 324p
324l (B/P) (ZP/Px)	**How many more people are still living in your household?** Number of people __ 97: Declined 98: Don't know	
324p (B/P) (ZP/Px)	{324o1=1 | after further 6 persons were captured in 324o } [PROG: if 324o1=2: If at least one other person has been listed]: I will now read you again the revised list of people living with you in this household**.** (PROG: if 324o1=2) INT: Read out the list of names – except respondent! [PROG: All]: **If I have named persons who do not live in your household or who are named twice, then I can correct this now.** PROG: **Display previously recorded names and person codes in a list form on the screen** **Is this list correct or does not one of these persons live with you in this household?** 1: List is correct --- 2. List needs to be corrected	 332 --- 324q

324q (B/P) (ZP/Px)	{324p=2} **INT: Mark all persons who according to the respondent do not live in the household of the respondent.** (PROG: green): Which of the listed persons does not live in your household? PROG: Show list of household members as multiple answers. 1: Listed 0: Not listen PROG: Delete listed household members	
	Questionn 325 bis 329 moved in the front	
	Questionn 330 bis 331b omitted	
332 (B/P) (ZP/Px)	**I would now like to ask a few [322a<5: further] questions about your current <u>housing situation</u>: How long have you been living in this town / city? Please give me the year.** INT: If the target subject indicates that she lived "always" or "since birth" in this place, please ask for corresponding calendar year! PROG: designation of year must not set before respondent's year of birth (question 2). PROG: Set max. value of year to 2017. Since the year _ _ _ _ 9997: Declined 9998: Don't know	
333 (B/P) (ZP/Px)	(322a=1|2|3|4): **And how long have you been living in your current dwelling? Please give me the year.** (322a=5|6|7): **And how long have you been living in this house? Please give me the year.** INT: If the target subject indicates that she lived "always" or "since birth" in this place, please ask for corresponding calendar year! PROG: Designation of year must not set before respondent's year of birth (Question 2) PROG: Set max. value of year to 2017. Since the year _ _ _ _ 9997: Declined 9998: Don't know --- Proxy = 0 [TP] --- Proxy > 0 [Proxy]	--- 334 --- 336a
334 (B/P) (ZP)	Proxy = 0 [TP] **Generally speaking, how would you rate your current housing situation?** INT: Show Orange list A! 1: very good 2: good 3: average 4: bad 5: very bad	

	7: Declined 8: Don't know --- DStich=0 [Panel sample] --- DStich=1 [Baseline sample]	 --- 336a --- 337
336a (P) (ZP/Px)	(DStich=0 [Panel sample]) Only program instruction/ Filter! 322a=1|2|3|4 1: private household, rest home, housing area with possibility for assisted living or retirement home (333>=DLJ [move since individual last survey) | 333=9997 | 333=9998) & 322a=1|2|3|4 --- 333<DLJ [no move since individual last survey] & 322a=1|2|3|4 --- 322a=5|6|7 2: rest home, nursing home or not specified Rest home	 337 --- 339 --- 346
337 (B/P) (ZP/Px)	(DStich=1 [Baseline sample]) | {(DStich=0 [Panel sample]) & 333>=DLJ [Umzug seit letzter Befragung] & 322a=1 | 2 | 3 | 4 [[is living in self guided household]} **How many rooms does your accommodation have, apart from kitchen, bath, and hallway?** INT: If the number of rooms is stated without any number after the decimal point, please add the number 0 after the decimal. PROG.: Limit the decimal place to 0,5 Rooms _ _ . _ 97: Declined 98: Don't know	
338.	Omitted.	
339 (B/P) (ZP/Px)	(DStich=1 [Baseline sample]) | {(DStich=0 [Panel sample]) & 322a=1 | 2 | 3 | 4 [[is living in self guided household]} **Do you live in this apartment/house as…** INT: Please read out examples! 1: owner --- 2: main tenant 3: or subtenant 4: or rent-free (e.g. right of residence, usufruct)? --- 5: other 7: Declined 8: Don't know	 342 --- 341 341 342 --- 341
340.	Omitted.	
341 (B/P) (ZP/Px)	(DStich=1 [Baseline sample]) | {(DStich=0 [Panel sample]) & 322a=1 | 2 | 3 | 4 [[is living in self guided household] & 339=2|3|5|7|8 [renter or missing]} **Approximately how high is the current monthly rent for this apartment / house including all extra charges such as electricity, gas, water, heating, garbage disposal,**	

	etc.? If you cannot give the exact amount, please give a rough estimate. PROG: Passagen „rental“ & „ including all additional costs " please emphasize colourful. PROG: if asked for additional cost show former mentioned €-amount. _ _ _ _ € per month 9997: Declined 9998: Don’t know (341≠9997|9998): INT: Please also indicate whether respondent stated rent with or without extra charges! 1: With extra charges 2: Without extra charges 7: Declined 8: Don’t know --- Proxy = 0 [TP] --- Proxy > 0 [Proxy]	--- 348 --- 350px
342 (B/P) (ZP/Px)	(DStich=1 [Baseline sample]) | {(DStich=0 [Panel sample]) & 322a=1 | 2 | 3 | 4 [[is living in self guided household] & 339=1 | 4 [owner or rentless]} **How high are the monthly costs for electricity, gas, water, heating, garbage disposal, etc.? If you do not know the exact costs, please give a rough estimate.** _ _ _ _ € per month 9997: Declined 9998: Don’t know --- 339=1 339=4 [rentless] Proxy = 0 [TP] --- Proxy > 0 [Proxy]	--- 343 348 --- 350px
343 (B/P) (ZP/Px)	(DStich=1 [Baseline sample]) | {(DStich=0 [Panel sample]) & 322a=1 | 2 | 3 | 4 [[is living in self guided household] & 339=1 [owner]} **Are you still paying off a mortgage or another type of loan for this apartment/ house?** 1: Yes --- 2: No 7: Declined 8: Don’t know 333>=DLJ [moving since last interview]) | 333=9998|9998 [missing] 333<DLJ [no moving since individually last survey] & Proxy=0 [TP] 333<DLJ [no move since individually last survey] & Proxy>0 [Proxy]	344 --- 345 348 350px

344 (B/P) (ZP/Px)	(DStich=1 [Baseline sample]) | {(DStich=0 [Panel sample]) & 322a=1 | 2 | 3 | 4 [[is living in self guided household] & 339=1 [owner] & 343=1 [installment]} **What amount do you pay monthly?** **If you cannot state the exact sum, please give a rough estimate.** _ _ _ _ € per month 9997: Declined 9998: Don't know --- 333>=DLJ [moving since last interview]) | 333=9998|9998 [missing] 333<DLJ [no moving since individually last survey] & Proxy=0 [TP] 333<DLJ [no move since individually last survey] & Proxy>0 [Proxy]	 --- 345 348 350px
345 (B/P) (ZP/Px)	(DStich=1 [Baseline sample]) & 339=1 [owner] | {(DStich=0 [Panel sample]) & 339=1 [Owner] & ((333>=DLJ [move since last survey]) | (333=9998|9998 [missing])} **How did you obtain this apartment / house?** INT: Please read out examples! 1: As an inheritance or gift 2: Through partner / house or apartment belongs to partner 3: Bought from previous owner 4: Bought new or newly built 5: Other 7: Declined 8: Don't know --- Proxy = 0 [TP] --- Proxy > 0 [Proxy]	 --- 348 --- 350px
346 (P) (ZP/Px)	(DStich=0 [Panel sample]) & 336A=2 [living in a resthouse] **How many person live in this room?** INT: Code depending on answer! Respondent lives in this room: 1: alone 2: with a further person 3: with two or more further person 7: Declined 8: Don't know	
347 (P) (ZP/Px)	(DStich=0 [Panel sample]) & 336A=2 [living in a resthouse] **Could you tell me how much it costs per month to live in this home?** **Per month about _ _ _ _ _ €** 99997: Declined 99998: Don't know	 P3

	PROG: Timestamp	
348 (B/P) (ZP)	(DStich=1 [Baseline sample]) | {(DStich=0 [Panel sample]) & Proxy=0 [TP] & 322a=1|2|3|4 [[is living in self guided household]} **I will now read out several offers and services from different fields. Please tell me, if you know such an offer in your city or your adminisrative district and – if yes – if you use it.** **Do you know in your city/ district...** PROG: Items and questions show successive A: community centres for seniors or multigenerational houses, e.g. from churches or welfare organisations (AWO) B: advice centres for seniors or contact points for political issues concerning seniors, e.g. in the town hall, adminisrative office for citizens, senior advisory council, local advisory council C: Care giving advice, e.g. through social town halls, social communities (VDK) D: living advice, advice for home adaption , e.g. through social town halls, social communities (VDK) 1:Yes --- 2: No 7: Declined 8: Don't know Continue with next supply --- If all supplies asked	349 --- 348 --- P3
349 (B/P) (ZP)	(DStich=1 [Baseline sample]) | {(DStich=0 [Panel sample]) & Proxy=0 [TP] & 322a=1|2|3|4 [[is living in self guided household] & 348A-D=1 [knows service] **Do you use this offer?** 1:Yes 2: No 7: Declined 8: Don't know Continue with next supply --- If all supplies asked	 348 --- P3
350px (P) (Px)	Proxy>0 [Proxy] PROG: Show items separetely **I would like to ask you a few more questions about your apartment.** A: Is your apartment or house accessible without steps? B: Do all stairs, inside the home, in the stairway or access to the house, have a handrail on both sides? C: Have all rooms no doorsills or these are so low (less than 2 cm) that they can be easily overcome with a walking frame or a wheelchair?	

	D: Are the doors of the bathroom (toilet) so wide that you also come through with crutches or a walking frame (minimum 80 cm)? E: Is the doors of bathroom (toilet) a outward opening door? F: Are all rooms inside the apartment or house accessible without stairs? G: Does a bathtub exist? H: Does a shower at that on grade (or a threshold of up to 2 cm) exist? I: Does a shower at that with an higher threshold or shower tray exist? J: Is there an emergency call system inside the apartment or house? K: Is there a stair lift inside the apartment or house? 1: Yes --- 2: No 7: Declined 8: Don't know	
P3 (B/P) (ZP/Px)	INT: Don't read out! Was there an interruption in the module Child, Grandchild and Living that lasted at least one minute? 1: Yes --- 2: No	 P3a --- 400
P3a (B/P) (ZP/Px)	P3=1 [interruption] INT: Don't read out! How long did this interruption last? Please give me the break in minutes. INT: If there were several interruptions please state the overall duration. INT: Please roand up on whole minutes. PROG: Min. value: 1. _ _ _Minutes --- Proxy = 0 [TP] --- Proxy > 0 [Proxy]	 --- 400 --- 400px

Nr.	Leisure activities and volunteering	Continue with
	PROG: Timestamp	
400px (P) (Px)	Proxy>0 [Proxy] **Next, I will ask what you do in the time that you can freely dispose, your leisure time activities** INT: Only read the following reminder if theproxy had difficulties with taking over the respondent's perspective. (PROG: green) (Proxy=1): **As I said at the beginning, I would like to ask you to answer the questions from the perspective of Mr. / Ms. [<NAME TP>].** (Proxy=2): **As I said at the beginning, the questions continue to be formulated to address Mr. / Ms [<NAME TP>].**	403
400 (B/P) (ZP)	Proxy=0 [TP] **The topic now is leisure -- what you do in your spare time.** **Generally speaking, how would you rate your leisure time activities at present?** INT: Show Orange list A! 1: very good 2: good 3: average 4: bad 5: very bad 7: Declined 8: Don't know	
401.	Omitted.	
402 (B/P) (ZP)	Proxy=0 [TP] **How do you expect your leisure time to change in the future?** INT: Show Orange list C! 1: Will improve greatly 2: Will improve somewhat 3: Will remain the same 4: Will worsen somewhat 5: Will get much worse 7: Declined 8: Don't know	
403 (B/P) (ZP/Px)	1: If <completed Age> >=50 --- 2: If < completed Age> < 50	404 --- 410
404 (B/P) (ZP/Px)	403=1 [>=50] **There are many groups that target older retirees or people in early retirement. Do you participate in activities of any of the groups listed here?** INT: Show list 404 and leave it available up to question 409! A Early retiree groups, groups to prepare for retirement B Senior support groups, senior citizen cooperatives	

	C Groups for volunteer work and aid D Senior citizen projects run by political parties or unions, senior citizen delegations and advisory boards E Senior citizen programs at universities and academies, continuing education programs F Company senior citizen groups G Senior leisure complexes, senior centers H Other senior groups (e.g., sports and dance groups) *(please specify)* 1: Yes --- 2: No 7: Declined 8: Don't know	 405 --- 410
405 (B/P) (ZP/Px)	{begin loop} 403=1 [>=50] & 404=1 [member yes] 1.Membership – example PROG: collect letter codes for max. 9 memberships. If more than 5 memberships mentioned, collect only letter codes. PROG: allow only codable letter codes or schedulded values **Please give me the appropriate Code Letter.** INT: If a Code Letter is given twice, please include separately! INT: Bitte Großbuchstaben eingeben Code Letter: __ Progr.: If Code Letter H: please enter other group: _____ --- 7: Declined 8: Don't know --- When 6th to 8th memberships --- When 9th membership	 406 --- 410 --- 409a --- 410
406 (B/P) (ZP/Px)	403=1 [>=] & 404=1 [member yes] & 1.-5. membership **Please tell me when you first attended this group.** INT: If there is more than one membership per category, they will be captured in the next run of the loop of questions gathering the memberships. PROG: Questionn 406-409 for maximal 5 Memberschaften zulassen. PROG: designaton must not set before year of birth (aus Question 2). PROG: Set max. value of year to 2017. Since _ _ _ _ 9997: Declined 9998: Don't know	
407 (B/P) (ZP/Px)	403=1 [>=50] & 404=1 [member yes] & 1.-5. membership **How often on an average have you attended gatherings, events, or meetings over the past 12 months?** INT: Please read out examples!	

	1: Several times a week 2: Once a week 3: 1-3 times a month 4: Several times a year 5: Less often 6: Never 7: Declined 8: Don't know	
408 (B/P) (ZP/Px)	403=1 [>=50] & 404=1 [member yes] & 1.-5. membership **Do you hold an office in the group or a volunteer position?** 1: Yes --- 2: No 7: Declined 8: Don't know	408a --- 409a
408a (B/P) (ZP/Px)	403=1 [>=50] & 404=1 [member yes] & 408=1 [function yes] & 1.-5. membership **Since when? Please give me the year.** INT: Enter year according to answer! PROG: designation of year must not set before respondent's year of birth (question 2). PROG: Set max. value of year to 2017. _ _ _ _ --- 9997: Declined 9998: Don't know	--- 409a
409 (B/P) (ZP/Px)	403=1 [>=50] & 404=1 [member yes] & 408=1 [Function yes] & 408a ≠ mi & 1.-5. membership **And how many hours on average do you spend on this activity?** INT: Enter hours according to answers! If less often than once monthly: ask about days per year! INT: Enter "0" in the other blanks! INT: If respondent asks, provide the following information: **"You can state the number of hours per day, hours per week, hours per month, or days per year."** 1: Hours / day: _ _ PROG: three- digit 2: Hours / week:: _ _ _ PROG: three- digit 3: Hours / month: _ _ _ PROG: three- digit 4: Days / year: _ _ _ PROG: Only one value >0 necessary → generate appropriate error message. Allow max. value 24 hours per day/week. Allow max. value 168 hours per day/week. Allow max. value 744 hours/month. Allow max. value 366 days/Year. Min. value jeweils 0. 997: Declined 998: Don't know	

409a (B/P) (ZP/Px)	{end loop } **Are you a member of another group or organization focusing on older people?** INT: Show list 404! 1: Yes --- 2: No 7: Declined 8: Don't know	 405 --- 410
410 (B/P) (ZP/Px)	**The following focuses on groups and organizations in general that one can join. Please take a look on lis 410. Are you a member of any of the following groups?** INT: Show list 410 and leave it available up to question 415! A Self-help group B Citizens' initiative C Charitable organization (e.g., Arbeiterwohlfahrt, Red Cross, veterans' associations) D Volunteer fire department E Hobby and collectors' clubs F Social club (e.g. bowling or cards) G Sports club H Refugee or displaced person' organization J Union K Businesses or professional association L Political party M Church or religious group N Folk society or civic association O Cultural association P Music and dance group Q Other *(please specify)* 1: Yes --- 2: No Proxy>0 [Proxy] --- Proxy=0 [TP] & 404=2 --- Proxy=0 [TP] & 404=1 --- Proxy=0 [TP] & 404=7|8 --- Proxy=0 [TP] & 403=2 (completed Age<50: 404 not asked because of age) 7: Declined 8: Don't know Proxy>0 [Proxy] --- Proxy=0 [TP] & 404=1 --- Proxy=0 [TP] & 404=7|8 (missing) --- Proxy=0 [TP] & 403=2 (completed Age<50: 404 not asked because of age) --- PROG: all shown PROG's duplicate for demonstration with PROG to 415_1	 411 --- 416 --- 415a --- 415c --- 415b --- 415a 416 --- 415c --- 415b --- 415b ---

411 (B/P) (ZP/Px)	{begin loop } 410=1 [member yes] PROG: collect letter codes for max. 9 memberships. If more than 5 memberships mentioned, collect only letter codes. PROG: allow only scheduled values 1. Membership – example **Please give me the appropriate Code Letter** INT: If a Code Letter is given twice, please include separately. INT: „Bitte Großbuchstaben eingeben“ Code Letter: __ Progr.: If Code Letter Q: please enter other group! **And what kind of group is this?** _____ --- 7: Declined 8: Don’t know Proxy>0 [Proxy] --- Proxy=0 [TP] --- 1.-5. membership [for TP and Proxy] --- when 6th till 8th membership [for TP and Proxy] --- When 9th membership Proxy>0 [Proxy] Proxy=0 [TP]	---------- 416 ---------- 415c ---------- 412 ---------- 415_1 ---------- 416 415c
412 (B/P) (ZP/Px)	410=1 [member yes] & 1.-5. membership **Please tell me how long you have been a member of this organization.** INT: If there is more than one membership per category, they will be captured in the next run of the loop of questions gathering the memberships. PROG: allow questions 412-415 for max. 5 memberships. PROG: designation must not be set before year of birth (aus Question 2). PROG: Set max. value of year to2017. since: _ _ _ _ 9997: Declined 9998: Don’t know	
413 (B/P) (ZP/Px)	410=1 [member yes] & 1.-5. membership **How often on an average have you attended gatherings, events, or meetings over the past 12 months?** INT: Please read options aloud! 1: Several times a week 2: Once a week 3: 1-3 times a month	

	4: Several times a year 5: Less often 6: Never 7: Declined 8: Don't know	
414 (B/P) (ZP/Px)	410=1 [member yes] & 1.-5. membership **Do you hold an office in the group or a volunteer position?** 1: Yes --- 2: No 7: Declined 8: Don't know	414a --- 415_1
414a (B/P) (ZP/Px)	410=1 [member yes] & 414=1 [Function yes] & 1.-5. membership **Since when? Please give me the year.** PROG: Set max. value of year to 2017. _ _ _ _ --- 9997: Declined 9998: Don't know	415 --- 415_1
415 (B/P) (ZP/Px)	410=1 [**member** yes] & 414=1 [Function yes] & 414a≠9997|9998 & 1.-5. membership **And how many hours on average do you spend on this activity?** INT: Enter hours according to answers! If less often than once monthly: ask about days per year! INT: Enter "0" in the other blanks! INT: If respondent asks, provide the following information: **"You can state the number of hours per day, hours per week, hours per month, or days per year."** 1: Hours / day: _ _ PROG: three-digit 2 Hours / week: _ _ _ PROG: three-digit 3: Hours / month: _ _ _ PROG: three-digit 4: Days / year: _ _ _ PROG: Only one value >0 necessary → generate appropriate error message. Allow max. value 24 hours per day/week. Allow Max. value 168 hours per day/week. Allow Max. value 744 hours/month. Allow Max. value 366 days/Year. Min. value jeweils 0. 997: Declined 998: Don't know	

415_1 (B/P) (ZP/Px)	{end loop} **Are you a member of another group or organization?** 1: Yes --- 2: No 7: Declined 8: Don't know Proxy>0 [Proxy] Proxy=0 [TP]	 411 --- 416 415c
PROG	Proxy=0 [TP] & 404=1 & 410=1 --> 415c Version 2 --- Proxy=0 [TP] & 404=1 & 410=2 --> 415c Version 2 --- Proxy=0 [TP] & 404=1 & 410=7,8 --> 415c Version 2 --- Proxy=0 [TP] & 404=2 & 410=1 --> 415c Version 2 --- Proxy=0 [TP] & 404=2 & 410=2 --> 415a, 415b, 415c Version 1 --- Proxy=0 [TP] & 404=2 & 410=7,8 --> 415b, 415c Version 1 --- Proxy=0 [TP] & 404=7,8 & 410=1 --> 415c Version 2 --- Proxy=0 [TP] & 404=7,8 & 410=2 --> 415b, 415c Version 1 --- Proxy=0 [TP] & 404=7,8 & 410=7,8 --> 415b, 415c Version 1 --- Proxy=0 [TP] & 404=too young & 410=1 --> 415c Version 2 --- Proxy=0 [TP] & 404= too young & 410=2 --> 415a, 415b, 415c Version 1 --- Proxy=0 [TP] & 404= too young & 410=7,8 --> 415b, 415c Version 1	
415a (B/P) (ZP)	Proxy=0 [TP] & ((403 = 1 & 404 = 2 [no Member Sen.Group] & 410 = 2 [no Member allg. Group]) | (403 = 2 [unter 50 Yeare] & 410 = 2 [no Member allg. Group])) **A person can have a variety of reasons for not participating in clubs, groups or organizations. What are your reasons?** INT: Show list 415a! INT: Please read items aloud! Items: 1: Agree completely 2: Agree partly 3: Disagree A I don't have the time for things like that. B If something happens, you're not even insured. C I can't afford things like that. D It only creates work and annoyances, but doesn't pay off for you personally. E I'm not suited for those childs of things. F That's not for people in my age. G My health doesn't allow it. H: I don't want to incur further liabilities.	

	I: There are no local opportunities or occasions. J: I'm not interested in things like that. 7: Declined 8. Don't know	
415b (B/P) (ZP)	Proxy=0 [TP] & ((403 = 1 & 404 = 2|7|8 [no Member Sen.Group] & 410 = 2|7|8 [no Member allg. Group]) | (403 = 2 [unter 50 Yearen] & 410 = 2|7|8 [no Member allg. Group])) **Did you used to be involved in clubs, groups, or organizations?** 1: Yes 2: No 7: Declined 8: Don't know	
415c (B/P) (ZP)	Proxy=0 [TP] & ((404≠1 [no member Sen.Group] & 410≠1 [no member gen.. Group]) | (403=2 [under 50 Years] & 410≠1 [no member gen.. Group]) (404=2 & 410=2|7|8) | (404=7|8 & 410=2|7|8) | (403=2 & 410=2|7|8): **Would you be interested in getting involved in clubs, groups, or organizations at present or in the future?** (404=1 & 410=1|2|7|8) | (404=2|7|8 & 410=1) | (403=2 & 410=1): **Would you be interested in getting involved in other clubs, groups, or organizations at present or in the future?** INT: Please note answer! 1: Yes 2: Maybe, it depends --- 3: No 7: Declined 8: Don't know	415d --- 416
415d (B/P) (ZP)	Proxy=0 [TP] & ((404≠1 [no member Sen.Group] & 410≠1 [no Member gen. Group]) | (403=2 [under 50 Years] & 410≠1 [no member gen. Group]) & 415c=1|2 [interest to engage in the future] **What areas would you consider getting involved in?** INT: Show list 415d! Multiple responses possible! PROG: allow multiple choice! A Sports and physical activity B School and preschool C Leisure and socializing D Church and religion E Culture and music F Social issues G Politics and interest groups H Occupational interest groups J Rescue services / volunteer fire department K Environmental protection, nature, and animal welfare L Youth and education M Health N Justice and crime problems O Other civic activity	

	1: mentioned 0: not mentioned 7:Declined 8: Don't know	
416 (B/P) (ZP/Px)	**Do you hold any other position, such as parent proxy, works council proxy, proxy to a neighbourhood assisance organization, or lay judge?** 1: Yes --- 2: No 7: Declined 8: Don't know	416a --- 422a
416a (B/P) (ZP/Px)	416=1 **Do you work …** 1: ... regularly in this position? 2: ... only to special times in a year in this position? 7: Declined 8: Don't know	
416b (B/P) (ZP/Px)	416=1 **And how many hours in average do you spend in this position?** INT: Enter hours according to answers! If less often than once monthly: ask about days per year! INT: Enter "0" in the other blanks! INT: If respondent asks, provide the following information: **"You can state the number of hours per day, hours per week, hours per month, or days per year."** 1: Hours / day: _ _ PROG: three-digit 2 Hours / week: _ _ _ PROG: three-digit 3: Hours / month: _ _ _ PROG: three-digit 4: Days / year: _ _ _ PROG: only once a value >0 → error message PROG: allow Max. value 24 hours/day. PROG: allow Max. value 168 hours/week. PROG: allow Max. value 744 hours/month. PROG: allow Max. value 366 days/year. PROG: Min. value each 0. 997: Declined 998: Don't know	
417.	Omitted.	
420.	Omitted.	
421.	Omitted	
422a. (P) (ZP/Px)	DStich=0 [Panel sample] **Respondent lives in...** 1: Private home, Retirement community (independent apartments ofigned aroand the needs of older people; *Altenwohnheim*), Residential care home offering assised living (*Betreutes Wohnen*), Senior citizens' residence (*Seniorenresidenz*) (DStich=0 [Panel sample]): counts for cases with 322a=1|2|3|4 --- 3: Retirement home (home providing care for older people who are no longer able to	423 --- 425

	maintain their own household but do not require a high degree of care; *Altenheim*), nursing home (home providing care for the chronically ill and/or people in need of a high degree of care; *Pflegeheim*) ,another type of home, not specifically defined (DStich=0 [Panel sample]): counts for cases with 322a=5|6|7	
423 (B/P) (ZP/Px)	DStich=1 [Baseline sample] | (DStich=0 [Panel sample] & 422a=1 [NOT in rest home] **I'd now like to go on to learn more about your activities and pastimes. Do you look after or supervise other people´s child privately, e.g., your grandchild or the child of siblings, neighbours, friends, or acquaintances?** INT: Do not include paid work (i.e., work in schools or daycare centers)! INT: Show list 423! Multiple responses possible! PROG: allow multiple choice! In Questiontext emphasize the word "privat" colourful. PROG: Code F must not mentioned simultaneously. A Grandchild B Child of siblings C Child of neighbours D Child of friends or acquaintances E Other (please note):	424
	F: No	425
	1: mentioned 0: not mentioned 7: Declined 8: Don't know	
424 (B/P) (ZP/Px)	(DStich =1 | (DStich = 0 & 422a = 1)) & 423 = A-E) **How many hours on an average do you spend on this?** INT: If respondent asks, provide the following information: "**You can state the number of hours per day, hours per week, hours per month, or days per year."** INT: If respondent names several child in response to question 423: add up total time for all child together and enter according to the answer! INT: Enter "0" in the other blanks! INT: If respondent answers "less often": press button "less often than 1 hour per month"! PROG.: Program a button 'rarer than 1 hour per month' 1: Hours / day: _ _ 2: Hours / week: _ _ 3: Hours / month: _ _ 4: Less often PROG: only once a value >0 → error message. PROG: allow Max. value 24 hours/day. PROG: allow Max. value 168 hours/week. PROG: allow Max. value 744 hours/month. PROG: Min. value each 0. 997: Declined 998: Don't know	
	423=A [Grandchildren mentioned]	424a
	423≠A [Grandchildren mentioned]	425
	Proxy>0 [Proxy]	425

424a (B/P) (ZP)	DStich=1 [Baseline sample] | (DStich=0 [Panel sample] & 422a=1 & 423=A [Grandchild in care] **And which of your grandchild do you take care of the most?** INT: Show Person Card II! INT: If no further grandchild named, then use Button. PROG: Allow only the intended grandchild codes. PROG: Do not allow that grandchild codes entered twice. PROG: Force an entry. 1. Grandchild code _ _ _ 997: Declined 998: Don't know 2. Grandchild code _ _ _ 995: no further grandchild 997: Declined 998: Don't know 3. Grandchild code _ _ _ 995: no further grandchild 997: Declined 998: Don't know	
425 (B/P) (ZP/Px)	**If you think back over the past 12 months:** **How often on an average do you engage in the following activities? Please tell me how often you do each activity on this lis.** INT: Show list 425! Please read out examples! 1: Daily 2: Several times a week 3: Once a week 4: 1 –3 a month 5: Less often 6: Never 7: Declined 8: Don't know A How often do you do housework? B How often do you do arts and crafts, do-it-yourself projects, or home improvements? C How often do you use social networks like facebook, stayfriends, 'feierabend.net'? D How often do you work with computers in your spare time, i.e., use of internet, e-mails, or playing computer games? E How often do you go to political meetings, i.e., held by parties, unions, or citizens' initiatives? F How often do you visit friends and acquaintances or invite them over to your home? G How often do you do crossword puzzles or quizzes? H How often do you work in the garden during the summer months? PROG: If an item Declined / Don't know, ask next item.	

425a (B/P) (ZP/Px)	**If you think about a normal working day, how much time do you spend on average not at home?** PROG: Max. 24h / day. 60 minutes/hour forced entry intended. About _ _ hours _ _ minutes INT: Please always indicate hours and minutes for a duration of at least one hour - examples: "1 hour, 0 minutes"; "3 hours, 15 minutes". For a less than one hour duration, enter only minutes (and enter 0 for hours) - Examples: "0 hours, 15 minutes"; "0 hours, 55 minutes". 97: Declined 98: Don't know	
Instrukt. 426-433 (B/P) (ZP/Px)	**I would also like to ask whether you do the following activities mainly alone or with other people. But first I would like to ask again how often you have done these activities during the past 12 months.** INT: Show list 426 and leave for reference up to question 427!	
426 (B/P) (ZP/Px)	**How often do you go for walks?** PROG: max. 24h/day, 60min/hour. 1: Daily **How long do you usually walk per day?** INT: For a duration of at least one hour, always state hours and minutes, for example: "1 hour, 0 minutes"; "3 hours, 15 minutes." For a duration of less than one hour, please state only minutes (and enter the value 0 for hours), for example: "0 hours, 15 minutes"; "0 hours, 55 minutes". _ _ hours _ _ minutes 2: Several times a week **How long do you usually walk per week all in all?** INT: For a duration of at least one hour, always state hours and minutes, for example: "1 hour, 0 minutes"; "3 hours, 15 minutes." For a duration of less than one hour, please state only minutes (and enter the value 0 for hours), for example: "0 hours, 15 minutes"; "0 hours, 55 minutes". _ _ hours _ _ minutes 3: Once a week **And how long do you usually walk then?** INT: For a duration of at least one hour, always state hours and minutes, for example: "1 hour, 0 minutes"; "3 hours, 15 minutes." For a duration of less than one hour, please state only minutes (and enter the value 0 for hours), for example: "0 hours, 15 minutes"; "0 hours, 55 minutes". _ _ hours _ _ minutes 4: 1- bis 3times a months 5: Less often --- 6: Never 7: Declined 8: Don't know	426a --- 427

426a (B/P) (ZP/Px)	426=1-5 [goes for a walk] **And do you usually do this alone or with other people?** INT: Multiple responses possible! (only for Codes B-F). *PROG*.: Code 1 may not be used with other PROG.: Allow multiple responses! Items: A Usually alone B With partner C With relatives D With friends E In a club F With others 1: mentioned 0: not mentioned 7: Declined 8: Don't know	
427 (B/P) (ZP/Px)	**How often do you do sports such as hiking, soccer, gymnastics, or swimming?** PROG: max. 24h/day, 60min/hour. 1: Daily **And how long you are typically do sports per day?** INT: For a duration of at least one hour, always state hours and minutes, for example: "1 hour, 0 minutes"; "3 hours, 15 minutes." For a duration of less than one hour, please state only minutes (and enter the value 0 for hours), for example: "0 hours, 15 minutes"; "0 hours, 55 minutes". _ _ hours _ _ minutes 2: Several times a week **And how long do you usually do sports per week all in all?** INT: For a duration of at least one hour, always state hours and minutes, for example: "1 hour, 0 minutes"; "3 hours, 15 minutes." For a duration of less than one hour, please state only minutes (and enter the value 0 for hours), for example: "0 hours, 15 minutes"; "0 hours, 55 minutes". _ _ hours _ _ minutes 3: Once a week **And how long you are then active in sports?** INT: For a duration of at least one hour, always state hours and minutes, for example: "1 hour, 0 minutes"; "3 hours, 15 minutes." For a duration of less than one hour, please state only minutes (and enter the value 0 for hours), for example: "0 hours, 15 minutes"; "0 hours, 55 minutes". _ _ hours _ _ minutes 4: 1-3 times a month 5: Less often --- 6: Never 7: Declined 8: Don't know	427a --- 428

427a (B/P) (ZP/Px)	427=1-5 [does sports] **And do you usually do this alone or with other people?** INT: Multiple responses possible! (only for codes B-F). PROG.: Code 1 may not be used with other PROG.: Allow mutiple responses. Items: A Usually alone B With partner C With relatives D With friends E In a club F With others 1: mentioned 0: not mentioned 7: Declined 8: Don't know	
428 (B/P) (ZP/Px)	**How often do you do something artisic such as painting or playing music?** INT: Show list 428 and leave for reference up to question 432a! 1: Daily 2: Several times a week 3: Once a week 4: 1- 3 times a month 5: Less often --- 6: Never 7: Declined 8: Don't know	428a --- 429
428a (B/P) (ZP/Px)	428=1-5 [is artistically active] **And do you usually do this alone or with other people?** NT: Multiple responses possible! (only for codes B-F). PROG.: Code 1 may not be used with other PROG.: Allow mutiple responses. Items: A Usually alone B With partner C With relatives D With friends E In a club F With others 1: mentioned 0: not mentioned 7: Declined 8: Don't know	

429 (B/P) (ZP/Px)	**How often do you go to concerts, theater, opera, or to museums, gallaries, or art exhibitions?** 1: Daily 2: Several times a week 3: Once a week 4: 1- 3 times a month 5: Less often --- 6: Never 7: Declined **8: Don't know**	 429a --- 430
429a (B/P) (ZP/Px)	429=1-5 [goes to theater etc.] **And do you usually do this alone or with other people?** INT: Multiple responses possible! (only for codes B-F). PROG.: Code 1 may not be used with other PROG.: Allow mutiple responses. Items: A Usually alone B With partner C With relatives D With friends E In a club F With others 1: mentioned 0: not mentioned 7: Declined 8: Don't know	
430 (B/P) (ZP/Px)	**How often do you go to sporting events?** 1: Daily 2: Several times a week 3: Once a week 4: 1- 3 times a month 5: Less often --- 6: Never 7: Declined 8: Don't know	 430a --- 431
430a (B/P) (ZP/Px)	430=1-5 [visits sport events] **And do you usually do this alone or with other people?** INT: Multiple responses possible! (only for codes B-F). PROG.: Code 1 may not be used with other PROG.: Allow mutiple responses. Items: A Usually alone B With partner C With relatives	

	D With friends E In a club F With others 1: mentioned 0: not mentioned 7: Declined 8: Don't know	
431 (B/P) (ZP/Px)	**How often do you play board games such as chess, play cards, or do puzzles?** 1: Daily 2: Several times a week 3: Once a week 4: 1- 3 times a month 5: Less often --- 6: Never 7: Declined 8: Don't know	431a --- 432
431a (B/P) (ZP/Px)	431=1-5 [does parlor games etc.] **And do you usually do this alone or with other people?** INT: Multiple responses possible! (only for codes B-F). PROG.: Code 1/A may not be used with other PROG.: Allow mutiple responses. Items: A Usually alone B With partner C With relatives D With friends E In a club F With others 1: mentioned 0: not mentioned 7: Declined **8: Don't know**	
432 (B/P) (ZP/Px)	**How often do you take classes or go to lectures, for example, for education and further training?** 1: Daily 2: Several times a week 3: Once a week 4: 1- 3 times a month 5: Less often --- 6: Never 7: Declined 8: Don't know	432a --- 433

432a (B/P) (ZP/Px)	432=1-5 [visits courses or talks] **And do you usually do this alone or with other people?** INT: Multiple responses possible! (only for codes B-F). PROG.: Code 1 may not be used with other PROG.: Allow mutiple responses. Items: A Usually alone B With partner C With relatives D With friends E In a club F With others 1: mentioned 0: not mentioned 7: Declined 8: Don't know	
433 (B/P) (ZP/Px)	**How often do you get together with a stable group of people – whether to go for a walk, play cards, or just to talk or meet at the regular table?** INT: Show list 433! 1: Daily 2: Several times a week 3: Once a week 4: 1- 3 times a month 5: Less often --- 6: Never 7: Declined 8: Don't know Proxy>0 [Proxy] Proxy=0 [TP]	433a --- P4 434
433a (B/P) (ZP/Px)	433=1-5 [meets stabil group of people] **Which people do you usually do that with?** INT: Multiple responses possible! PROG: Allow multiple responses PROG: Make sure that the first option - "B" – is coded with "2" and then counted accordingly. Items: B With partner C With relatives D With friends E In a club F With others 1: mentioned 0: not mentioned 7: Declined	

	8: Don't know Proxy=0 [TP] Proxy>0 [Proxy]	 434 P4
434 (B/P) (ZP)	Proxy=0 [TP] **Everyone gets older. Ageing involves changes in many areas of life. I will read you some changes that could possibly take place as people get older, and I would like you to tell me whether you think these are typical of getting older in general. Please just think about what it's like getting older for the majority of people.** **Please state to what extent these changes are typical aspects of getting older in general**. INT: Show list 434! Please read out examples! Items: 1: Strongly agree 2: Agree 3: Disagree 4: Strongly disagree 7: Declined 8: Don't know **For most people, getting older means ...** A: … that everything gets worse B: … that they have just as much energy as before C: ... that they are less useful D: ... that their life is better than they expected E: ... that they are just as happy as in their younger years	
P4 (B/P) (ZP/Px)	INT: Don't read out! Was there an interruption in the module engagement and activities that lasted at least one minute? 1: Yes --- 2: No Proxy>0 [Proxy] Proxy=0 [TP]	 P4a --- 500px 500a
P4a (B/P) (ZP/Px)	P4=1 [interruption] INT: Don't read out! How long did this break take? Please enter the break in minutes! INT: If there were several interruptions please state the overall duration. INT: Please roand up on whole minutes. PROG: Min. value: 1. How long did this interruption last? Please give me the break in minutes. _ _ _Minutes Proxy>0 [Proxy] Proxy=0 [TP]	 500px 500a

Nr.	HEALTH	Continue with
500	Omitted.	
	PROG: Timestamp	
500px (P) (Px)	DStich=0 [Panel sample] & Proxy>0 [Proxy] **In the following, we have some questions about your health.** INT: Only read out the following reminder if there were difficulties with the transfer of perspective by the proxy. (PROG: green) (Proxy = 1): **I would like to remind you once again to answer the questions from the perspective of Mr / Ms [<NAME TP>].** (Proxy = 2): **Let me remind you once again that the following questions are also formulated to address Mr / Ms [<NAME TP>].**	503aa
500a (B/P) (ZP)	DStich=1 [Baseline sample] | (DStich=0 [Panel sample] & Proxy=0 [TP]) **In the following we want to address your personal view on some issues and spheres of life. I would like to know, how much these issues bother you, so how much you think of them. In a second step I will ask you, how much you actively do for these issues and life spheres.** INT: Keep available the life spheres-cards, open out list 500a on the table. **Now I put in 10 cards on the table, on which the issues or life spheres are written. Please match these cards to the answering line – and in a way that it is recognizable how much you currently in your daily life think of this issue or life sphere.** **0 means that you don't think of it at all, 5 means that you think a lot of it. With the values in between you can graduate your estimation.** **What's interesting for us: How often do you currently think of the following issues and life spheres? Please match all cards to a number. You can also match several cards to one number; in this case just put the cards one anderneath the other.** INT: Put all 10 cards on the table. If the respondent asks, if it should be considered, how much something is done for a sphere, please remark, that „Doing" will be asked in the second step and therefore should not be considered now. Pay attention, that every card is matched to exactly one number. If the respondent puts a card between two numbers, express the following appeal: (PROG: green) **'Please match this issue or life sphere only to one number.'** INT: several cards can be matched to the same number. If possible the cards should not be piled, but be put one anderneath the other. If a person needs a lot of time for matching a card (more than about 30 seconds), please try to encourage answering more quickly. (PROG: green) **„Please answer as spontaneously as possible, without long considering."** INT: If the respondent wants to match another number to faith than to religion, he should please match the higher value to this life sphere. INT: After all 10 cards are matched record the answer code for every issue/ life sphere in the computer. 0: I don't think of it 1: 2: 3: 4: 5: I think a lot of it	

	7: Declined 8: Don’t know A: family B: relationship C: friendship D: health E: job F: living standard G: spare time H: living I: faith/ religion J: politics	
	PROG: Timestamp	
500b (B/P) (ZP)	DStich=1 [Baseline sample] | (DStich=0 [Panel sample] & Proxy=0 [TP]) INT: Karten new auf dem Tisch mischen and lesbar hinlegen. Lise 500b auf dem Tisch ausklappen. **I would like to ask you to use these cards again. Please state now, how much you currently do in your daily life for this issue or life sphere.** **0 means, that you don’t do anything for it, 5 means that you do a lot for it. With the values in between you can graduate your estimation.** **What’s now interesting for us: How much do you currently do something regarding the following issues or life spheres?** INT: Pay attention, that every card is matched to exactly one number. If the respondent puts a card between two numbers, express the following appeal: (PROG: green) **’Please match this issue or life sphere only to one number.’** INT: several cards can be matched to the same number. If possible the cards should not be piled, but be put one anderneath the other.If a person needs a lot of time for matching a card (more than about 30 seconds), please try to encourage answering more quickly. (PROG: green) **„Please answer as spontaneously as possible, without long considering.“** INT: After all 10 cards are matched record the answer code for every issue/ life sphere in the computer. INT: If the respondent wants to match another number to faith than to religion, he should please match the higher value to this life sphere 0: I don’t do anything for it 1: 2: 3: 4: 5: I do a lot for it 7: Declined 8: Don’t know A: family B: relationship C: friendship D: health E: job F: living standard G: spare time	

	H: living I: faith/ religion J: politics	
	PROG: Timestamp	
501 (B/P) (ZP)	DStich=1 [Baseline sample] | (DStich=0 [Panel sample] & Proxy=0 [TP]) **I want to ask you some questions about your healtth: How would you rate your present state of health?** INT: Show Orange list A! 1: very good 2: good 3: average 4: bad 5: very bad 7: Declined 8: Don't know	
502 (B/P) (ZP)	DStich=1 [Baseline sample] | (DStich=0 [Panel sample] & Proxy=0 [TP]) **How has your state of health changed over the past** [DStich=1: **10** | DStich=0: **3]** **years?** INT: Show Orange list B! 1: Has improved greatly 2: Has improved somewhat 3: Has stayed the same 4: Has worsened somewhat 5: Has gotten much worse 7: Declined 8: Don't know	
503 (B/P) (ZP)	DStich=1 [Baseline sample] | (DStich=0 [Panel sample] & Proxy=0 [TP]) **How do you expect your state of health to change in the future?** INT: Show Orange list C! 1: Will improve greatly 2: Will improve somewhat 3: Will remain the same 4: Will worsen somewhat 5: Will get much worse 7: Declined 8: Don't know	
503a (B/P) (ZP)	DStich=1 [Baseline sample] | (DStich=0 [Panel sample] & Proxy=0 [TP]) **How would you rate your health compared with other people your age?** INT: Show list 503a! 1: Much better 2: Somewhat better 3: The same 4: Somewhat worse 5: Much worse	

	7: Declined 8: Don't know	
503aa (B/P) (ZP/Px)	**Do you have any long standing illness or health problem?** INT: explain only upon request: (PROG: green): **„Chronic require a long period of supervision, observation or care. e.g. diabetes or heart diseases."** 1: Yes, one 2: Yes, several 3: No 7: Declined 8: Don't know	
503ab (B/P) (ZP/Px)	**Was there an official determination of a disability for you?** **This official determination could be granted by a maintenance council, disabled person's pass, war disabled person's pass, pension awards, adminisration or court decision**. 1: Yes --- 2: No 7: Declined 8: Don't know DStich=1 [Baseline sample] | (DStich=0 [Panel sample] & Proxy=0 [TP]) --- DStich=0 [Panel sample] & Proxy>0 [Proxy]	503ac --- 503b --- 506a1
503ac (B/P) (ZP/Px)	503ab=1 [disability is asserted through officially information] **What's your official degree of disability?** INT: explain only upon request: (PROG: green): **„Please give me the percentage that is given in your pass."** PROG: limit answer to 20, 30, 40, 50, 60, 70, 80, 90, 100. _ _ _ % 997: Declined 998: Don't know DStich=1 [Baseline sample] | (DStich=0 [Panel sample] & Proxy=0 [TP]) --- DStich=0 [Panel sample] & Proxy>0 [Proxy]	503b --- 506a1
503b (B/P) (ZP)	DStich=1 [Baseline sample] | (DStich=0 [Panel sample] & Proxy=0 [TP]) **Have you had constant or recurring pain in the last four weeks, and if so, how severe was it?** INT: Show list 503b! 1: I didn't have any pain	

	I had pain; it was: 2: very slight 3: slight 4: morate 5: severe 6: very severe 7: Declined 8: Don’t know	
504 (B/P) (ZP)	DStich=1 [Baseline sample] | (DStich=0 [Panel sample] & Proxy=0 [TP]) **Below is a list of the ways you might have felt or behaved. Please tell me how often you have felt this way during the past week.** INT: Show list 504! Items: 1: Rarely or none of the time (less than 1 day) 2: Some or a little bit of the time (1 to 2 days) 3: Occasionally or a morate amount of time (3 to 4 days) 4: Most or all of the time (5 to 7 days) 7: Declined 8: Don’t know **During the past week…** A: I was bothered by things that usually don't bother me B: I felt that I could not shake off the blues even with help from my family or friends C: I had trouble keeping my mind on what I was doing D: I felt depressed E: I felt that everything I did was an effort F: I thought my life had been a failure G: I felt fearful H: My sleep was restless J: I was happy K: I talked less than usual L: I felt lonely M: I enjoyed life N: I felt sad O: I felt that people dislike me P: I could not get “going”	
505 (B/P) (ZP)	DStich=1 [Baseline sample] | (DStich=0 [Panel sample] & Proxy=0 [TP]) **I would now like to ask you some questions about your body and your health: Can you tell me how tall you are?** PROG.: Limit answer from 1 to 250. _ _ _ cm 997: Declined 998: Don’t know	

506 (B/P) (ZP)	DStich=1 [Baseline sample] | (DStich=0 [Panel sample] & Proxy=0 [TP]) **About how much do you weigh?** PROG: Limit answer from 1 to 350. _ _ _kg 997: Declined 998: Don't know	
506a1 (B/P) (ZP/Px)	**Did you lose more than 5 kg in the last year?** 1: Yes --- 2: No 7: Declined 8: Don't know DStich=1 [Baseline sample] | (DStich=0 [Panel sample] & Proxy=0 [TP]) --- DStich=0 [Panel sample] & Proxy>0 [Proxy]	 506a2 --- 507 --- 507px
506a2 (B/P) (ZP/Px)	506a1=1 [loses more than 5kg during last year] **Did this happen intentionally, e.g. by a diet or physical activity or unintentionally?** 1: intentionally 2: unintentionally 7: Declined 8: Don't know DStich=1 [Baseline sample] | (DStich=0 [Panel sample] & Proxy=0 [TP]) --- DStich=0 [Panel sample] & Proxy>0 [Proxy]	 507 --- 507px
506a.	Moved to drop-off.	
507px (P) (Px)	DStich=0 [Panel sample] & Proxy>0 [Proxy] **Do you use one or more of the following aids?** Multiple choice answers: 1: Yes 2: No 7: Declined 8: Don't know A: vision aid: glasses, contact lenses B: hearing aid C: cane / walking aid D: walker, rollator, 3-wheel walker E: wheelchair	 507

507 (B/P) (ZP/Px)	**Do vision problems cause you trouble reading the newspaper (possibly even when using a vision aid)?** INT: Show list 507 and leave for reference up to question 510! 1: No difficulties 2: Some difficulties 3: Major difficulties 4: Impossible 7: Declined 8: Don't know	
508 (B/P) (ZP/Px)	**Do you have difficulties recognizing people you know on the street due to vision problems (possibly even when using a vision aid)?** INT: Show list 507! 1: No difficulties 2: Some difficulties 3: Major difficulties 4: Impossible 7: Declined 8: Don't know	
508a	Moved to drop-off.	
509 (B/P) (ZP/Px)	**Do you have hearing problems on the telephone (possibly even when using a hearing aid)?** INT: Show list 507! 1: No difficulties 2: Some difficulties 3: Major difficulties 4: Impossible 7: Declined 8: Don't know	
510 (B/P) (ZP/Px)	**Do you have hearing problems in groups of four and more people (possibly even when using a hearing aid)?** INT: Show list 507! 1: No difficulties 2: Some difficulties 3: Major difficulties 4: Impossible 7: Declined 8: Don't know	
511 (B/P) (ZP/Px)	**The following questions are about activities you might do during a typical day. Does your health now limit you in these activities? If so, how much?** 1: Yes, limited a lot. 2: Yes, limited a little. 3: No, not limited at all.	

	7: Declined 8: Don't know INT: Please read out examples! A: Vigorous activities, such as running, lifting heavy objects, participating in strenuous sports. B: Morate activities, such as moving a table, pushing a vacuum cleaner, bowling, or playing golf? C: Lifting or carrying groceries D: Climbing several flights of stairs E: Climbing one flight of stairs F: Bending, kneeling, or stooping G: Walking more than one kilometer (0.62 miles) H: Walking several blocks I: Walking one block K: Bathing or dressing yourself L: Going to and out of bed M: Walking around at home N: Moving along outside, e.g. driving a car, using public transportation O: Eating meals and drinking liquids (e.g., cutting your food) P: Taking medications PROG: if designation 7 or 8 next Item. PROG: 511A –G=3 → Items H-P no question. DStich=1 [Baseline sample] | (DStich=0 [Panel sample] & Proxy>0 [Proxy]) --- DStich=0 [Panel sample] & Proxy=0 [TP]	513 --- 512a
512	Omitted.	
512a (P) (ZP)	DStich=0 [Panel sample] & Proxy=0 [TP] **If you think back on your health 3 years ago, how was it then?** INT: Show Orange list A! 1: Very good 2: Good 3: Average 4: Bad 5: Very bad 7: Declined 8: Don't know	
513 (B/P) (ZP/Px)	**A temporary or permanent impairment of health due to a serious illness or accident is a dramatic event in many people's lives. Have you yourself suffered a serious illness or had an accident in the past 10 years** [DStich=1: **10** | DStich=0: **3**]**?** 1: Yes, a serious illness --- 2: Yes, an accident --- 3: Yes, both (serious illness and accident) --- 4: No 7: Declined 8: Don't know	514 --- 514a --- 513a ---

	DStich=1 [Baseline sample] | (DStich=0 [Panel sample] & Proxy=0 [TP]) --- DStich=0 [Panel sample] & Proxy>0 [Proxy]	518a --- 518px
513a (B/P) (ZP/Px)	513=3 [illness & accident present] **Which experience was worse for you: the illness or the accident?** 1: Illness --- 2: Accident --- 7: Declined 8: Don't know DStich=1 [Baseline sample] | (DStich=0 [Panel sample] & Proxy=0 [TP]) --- DStich=0 [Panel sample] & Proxy>0 [Proxy]	 514 --- 514a 518a --- 518px
514 (B/P) (ZP/Px)	513=1 [Incident is illness] | 513a=1 [heaviest Incident is illness] **Could you tell me which year this illness occurred (or began)?** PROG: designation must not set before Year of birth. PROG: Set max. value of year to 2017. year _ _ _ _ (DStich=1 [Baseline sample] & 514>=2007 BJahr-10) | (DStich=0 [Panel sample] & 514>= BJahr-3) --- (DStich=1 [Baseline sample] & 514< BJahr-10) | (DStich=0 [Panel sample] & 514< BJahr-3) 9997: Declined 9998: Don't know DStich=1 [Baseline sample] | (DStich=0 [Panel sample] Proxy=0 [TP]) --- (DStich=0 [Panel sample] & Proxy>0 [Proxy]	 514.1 --- 514a1 518a --- 518px
514a1 (B/P) (ZP/Px)	(513=1 [Incident is illness] | 513a=1 [heaviest Incident is illness]) & (514<2017 [Designation of year of illness is not set in requested periode]) **You mentioned a year for this disease (resp. for the start of the disease) that lies before the meant time span since the year [DStich=1:** BJahr-10 **| DStich=0:** BJahr-3**]. Thus our question: Did another incident relating to the disease occur in the past [DStich=1: 10 | DStich=0: 3] years?** PROG (DStich=1): designation must set only between BJahr-10 and BJahr. PROG (DStich=0): designation must set only between BJahr-3 and BJahr. 1: No, no other incident DStich=1 [Baseline sample] | (DStich=0 [Panel sample] & Proxy=0 [TP]) --- DStich=0 [Panel sample] & Proxy>0 [Proxy] --- 2: Yes, another incident in the year _ _ _ _	 518a --- 518px --- 514.1

	9997: Declined 9998: Don't know DStich=1 [Baseline sample] | (DStich=0 [Panel sample] & Proxy=0 [TP]) --- DStich=0 [Panel sample] & Proxy>0 [Proxy]	 518a --- 518px
514.1 (B/P) (ZP/Px)	**(513=1 [Incident is illness] | 513a=1 [heaviest Incident is illness]) & 514a1=2** [Designation recurrenced occasion in requested periode is affirmed]) **Are you still suffering from this illness?** 1: Yes 2: No 7: Declined 8: Don't know	 515
514a (B/P) (ZP/Px)	513=2 [Incident is illness] | 513a=2 [Heaviest Incident is illness] **Could you tell me which year this accident occurred?** PROG: Angabe must not vor Year of birth liegen PROG: Max. value Year auf 2017 setzen year _ _ _ _ (DStich=1 [Baseline sample] & 514a>= BJahr-10) | (DStich=0 [Panel sample] & 514a>= BJahr-3) --- (DStich=1 [Baseline sample] & 514a< BJahr-10) | (DStich=0 [Panel sample] & 514a< BJahr-3) 9997: Declined 9998: Don't know DStich=1 [Baseline sample] | (DStich=0 [Panel sample] & Proxy=0 [TP]) --- DStich=0 [Panel sample & Proxy>0 [Proxy]	 515a --- 514a2 518a --- 518px
514a2 (B/P) (ZP/Px)	(513=2 [Incident is accident] | 513a=1 [Heaviest incident is accident]) & (514a<2014 [Year specification accident is outside the period covered]) **You have specified a year for this accident, which is earlier than the meant period since the year** [DStich=1: BJahr-10 | DStich=0: BJahr-3]. **Therefore our request: Has there been a renewed incident in connection with this accident in recent** [DStich=1: **10** | DStich=0: **3**] **years?** PROG (DStich=1): Specification may only be between BJahr-10 und BJahr. PROG (DStich=0): Specification may only be between BJahr-3 und BJahr. 1: No, no new incident DStich=1 [Baseline sample] | (DStich=0 [Panel sample] & Proxy=0 [TP]) --- DStich=0 [Panel sample] & Proxy>0 [Proxy] ---	 518a --- 518px ---

	2: Yes, another event in the year --- 9997: Declined 9998: Don't know DStich=1 [Baseline sample] | (DStich=0 [Panel sample] & Proxy=0 [TP]) --- DStich=0 [Panel sample] & Proxy>0 [Proxy]	515a --- 518a --- 518px
515 (B/P) (ZP/Px)	(513=1 [Incident is illness] | 513a=1 [Heaviest incident is illness]) & 514a1=2 [Designation recurrenced occasion in requested periode isapproved])]) **What kind of illness was it? Please ofcribe it in a few words.** _____ _____ DStich=1 [Basis] | (DStich=0 [Panel] & Proxy=0 [ZP]) --- DStich=0 [Panel] & Proxy>0 [Proxy]	 516 --- 518px
515a (B/P) (ZP/Px)	513=2 [Incident is illness] | 513a=2 [Heaviest Incident is illness] **What kind of injury was it? Please ofcribe it in a few words.** _____ _____ DStich=1 [Baseline sample] | (DStich=0 [Panel sample] & Proxy=0 [TP]) --- DStich=0 [Panel sample] & Proxy>0 [Proxy]	 516a --- 518px
516 (B/P) (ZP)	(DStich=1 [Baseline sample] | (DStich=0 [Panel sample] & Proxy=0 [TP])) & (513=1 [Incident is illness] | 513a=1 [Heaviest incident is illness]) & 514a1=2 [Designation recurrenced occasion in requested periode is affirmed]) **If you think back: how difficult was it for you to deal with this illness?** INT: Show List 516! 1: Very difficult 2: Difficult 3: A little difficult 4: Hardly difficult 5: Not at all difficult 7: Declined 8: Don't know	 518a
516a (B/P) (ZP)	(DStich=1 [Baseline sample] | (DStich=0 [Panel sample] & Proxy=0 [TP])) & (513=2 [Incident is illness] | 513a=2 [Heaviest Incident is illness]) & & 514a2=2 [Indication of a renewed incident within the requested period is affirmed] **If you think back: how difficult was it for you to deal with this injury?** NT: Show List 516! 1: Very difficult 2: Difficult	

	3: A little difficult 4: Hardly difficult 5: Not at all difficult 7: Declined 8: Don't know	518a
517.	Omitted.	
518.	Omitted.	
518a (B/P) (ZP)	DStich=1 [Baseline sample] | (DStich=0 [Panel sample] & Proxy=0 [TP]) **Please look at the following list: Has a doctor ever told you that you are suffering from one of the illnesses listed? Please tell me the letters corresponding to all illnesses that apply.** INT: Show List 518a! INT: Allow multiple responses PROG: Multiple responses possible! Answer Options: 0: not mentioned 1: mentioned 95: No illness 97:Declined 98: Don't know A: High cholesterol B: Diabetes, high blood sugar levels C: High blood pressure D: Heart attack, angina pectoris E: Cardiac insufficiency including coronary artery disease F: Stroke G: Circulatory disorders in the brain H: Circulatory disorders in the legs J: Joint degeneration (arthrosis) of the hips, knees, or spine K: Osteoporosis L: Inflammatory joint or spinal disease (arthritis or rheumatoid arthritis) M: Chronic pulmonary disease (e.g., chronic bronchitis, pulmonary emphysema) N: Cancer, malignant tumor (including leukemia) O: Stomach ulcer, intestinal ulcer P: Incontinence Q: Mental illness (e.g. panic attacks, depression, psychosis) R: Parkinson's disease S: Glaucoma or macular degeneration T: Other chronic disease or health condition (only longer-term or recurring diseases) please specify: _____	520
518px (P) (Px)	DStich=0 [Panel sample] & Proxy>0 [Proxy] **Has a doctor ever told you that you have one of these illnesses?** INT: Show List 518a.! Please read the guidelines! Answer Options: 1: Yes 2: No 97: Declined	

	98: Don‘t know A: High cholesterol B: Diabetes, high blood sugar levels C: High blood pressure D: Heart attack, angina pectoris E: Cardiac insufficiency including coronary artery disease F: Stroke G: Circulatory disorders in the brain H: Circulatory disorders in the legs J: Joint degeneration (arthrosis) of the hips, knees, or spine K: Osteoporosis L: Inflammatory joint or spinal disease (arthritis or rheumatoid arthritis) M: Chronic pulmonary disease (e.g., chronic bronchitis, pulmonary emphysema) N: Cancer, malignant tumor (including leukemia) O: Stomach ulcer, intestinal ulcer P: Incontinence Q: Mental illness (e.g. panic attacks, depression, psychosis) R: Parkinson’s disease S: Glaucoma or macular degeneration T: Other chronic disease or health condition (only longer-term or recurring diseases) please specify: _____	
519	Moved to drop-off.	
520 (B/P) (ZP/Px)	**How many different medications do you take on an average day? Please also include insulin, ointments, birth control pills, hormone replacements, and slow-release medication!** INT: If the respondent names slow-release medications, please add up the number of medications. *INT: If they do not state any medications, please use the button!* Progr.: maximum value: 994 PROG: three-digit ___ medications per day. 520>=2 [2 or named more medicin] ---------- 520=1 [named 1 Medicin] ---------- 995: No medications 997: Declined 998: Don’t know	520a ---------- 520b ---------- 521
520a (B/P) (ZP/Px)	520>=2 [takes 2 or more medicine] **How many of these medications were prescribed to you by a doctor?** INT: If all (i.e. <value from 520>) or no medications, please use the buttons! PROG: Max. value=<value of 520> minus 1. PROG: three- digit ___ medications were prescribed by a doctor. 994: All 995: No medications 997: Declined 998: Don’t know	521

520b (B/P) (ZP/Px)	520=1 [takes 1 medicin] **Was this medication prescribed to you by a doctor?** 1: Yes 2: No 7: Declined 8: Don't know	
520	Omitted.	
521 (B/P) (ZP/Px)	**How many nights during the past 12 months have you spent in the hospital on an inpatient Baseline sample?** INT: If target subject was not a night in the hospital, then use button. PROG.: maximum value: 366 About _ _ _ nights 995: Not one night 997: Declined 998: Don't know DStich=1 [Baseline sample] (DStich=0 [Panel sample]) & (322a=1|2|3|4) (DStich=0 [Panel sample]) & (322a=5|6|7) & Proxy=0 [TP] (DStich=0 [Panel sample]) & (322a=5|6|7) & Proxy>0 [Proxy]	 523a 523a 561 P5
522	Omitted.	
522a	Omitted.	
523	Omitted.	
523a (B/P) (ZP/Px)	322a=1|2|3|4 [NOT in rest home]) **Have you been limited in doing normal activities during the past 6 months due to health problems?** INT: Please read options aloud! 1: Yes, limited a lot 2: Yes, limited a little 3: No, not limited at all 7: Declined 8: Don't know DStich=1 [Baseline sample] | (DStich=0 [Panel sample] & Proxy=0 [TP]) DStich=0 [Panel sample] & Proxy>0 [Proxy]	 524 539 P5

524. (B/P) (ZP/Px)	322a=1|2|3|4 [NOT in rest home] & 523a=1|2 [(heavy) limited] **Is your health so severely impaired that you need regular assisance, care or other support?** 1: Yes --- 2: No 7: Declined 8: Don't know DStich=1 [Baseline sample] | (DStich=0 [Panel sample] & Proxy=0 [TP]) --- DStich=0 [Panel sample] & Proxy>0 [Proxy]	 525a --- 539 --- P5
525	Omitted.	
525a (B/P) (ZP/Px)	322a=1|2|3|4 [NOT in rest home] & 523a=1|2 [(heavy) limited] & 524=1 [rely on support, help, care] **What forms of assisance and support do you receive** INT: Please read out questions! Ask about each form of assisance separately. Answer options: 1: Yes 2: No 7: Declined 8: Don't know A: Do you have someone to help you aroand the house? B: Does someone take care of you or keep you company? C: Do you receive care or nursing-related assisance? D: Do you receive any other assisance? --- PROG: If 525a A=no or declined or don't know and B=no or declined or don't know and C=no or declined or don't know and D=no or declined or don't know. DStich=1 [Baseline sample] | (DStich=0 [Panel sample] & Proxy=0 [TP]) --- DStich=0 [Panel sample] & Proxy>0 [Proxy]	 526a --- 539 --- P5
526	Omitted.	
526a (B/P) (ZP/Px)	322a=1|2|3|4 [NOT in rest home] & 523a=1|2 [is (heavy) limited] & 524=1 [rely on support, help, care] & 525a A|B|C|D=1 [mind. one „yes"-designation realted to form of help and support] **Which person or people provide you with this support?** INT: Show Person Cards I and II and enter Person Code! INT: If respondant names person, who are not on the Person Cards: please note on Person Cards! INT: after 2. Person: If no other person are mentioned, use the button. PROG: allow only valide codes.	

	PROG: prohibit multiple choice of explicit person codes mithin the matrix (102 bis 106; 201 to 208; 301 bis 330; 501 bis 505). PROG: paste from 2. Person answer button 'no further person mentioned'. Person 1: Person Code: _ _ _ 997: Declined 998: Don't know Person 2: Person Code: _ _ _ 997: Declined 998: Don't know Person 3: Person Code: _ _ _ 997: Declined 998: Don't know 1: More than three people named If more than one person --- If one person only	 527a --- 528a
527	Omitted.	
527a (B/P) (ZP/Px)	322a=1|2|3|4 [NOT in Rest home] & 523a=1|2 [is (heavy) limited] & 524=1 [rely on support, help, care] & 525a A|B|C|D=1 [min. one "yes"- designation relating to the form of help and support] & 526a>1 [several person, who supply support] **On average, how much time per week does it take these people to help you and provide assisance? Please give a weekly average number of hours per person.** PROG.: Limit number of hours to 168 (24*7) About _ _ _ hours 997: Declined 998: Don't know DStich=1 [Baseline sample] | (DStich=0 [Panel sample] & Proxy=0 [TP]) --- DStich=0 [Panel sample] & Proxy>0 [Proxy] --- 525a C=1	 539 --- P5 --- 532
528	Omitted.	
528a (B/P) (ZP/Px)	322a=1|2|3|4 [NOT in Rest home] & 523a=1|2 [is (heavy) limited] & 524=1 [rely on support, help, care] & 525a A|B|C|D=1 [min. one "yes"- designation relating to the form of help and support] & 526a=1 [one person, who supply support] **On average, how much time per week does it take this person to help you and provide assisance? Please give a weekly average number of hours per person.** Progr.: Limit number of hours to 168 (24*7) About _ _ _ hours 997: Declined 998: Don't know	

	DStich=1 [Baseline sample] | (DStich=0 [Panel sample] & Proxy=0 [TP]) --- DStich=0 [Panel sample] & Proxy>0 [Proxy] --- 525a C=1	539 --- P5 --- 532
529.	Omitted.	
530.	Omitted.	
531.	Omitted.	
532 (B/P) (ZP/Px)	322a=1|2|3|4 [NOT in Rest home] & 523a=1|2 is (heavy) limited] & 524=1 [rely on support, help, care] & 525a C=1 [received nursing help] **Are you currently receiving regular benefits from your long-term care insurance?** 1: Yes --- 2: No 7: Declined 8: Don't know DStich=1 [Baseline sample] | (DStich=0 [Panel sample] & Proxy=0 [TP]) --- DStich=0 [Panel sample] & Proxy>0 [Proxy]	532a --- 539 --- P5
532a (B/P) (ZP/Px)	322a=1|2|3|4 [NOT in care institution] & 523a=1|2 [is (strongly) restricted] & 524=1 [relies on help, care, support] & 525a C=1 [receive care-related assistance] & 532=1 [benefits covered by long-term nursing care insurance] **In what care degree are you currently classified?** INT: Complement if demanded: As part of the second Long Term Care Strengthening Act, since 1 January 2017, the need for long-term care has no longer been classified in care levels, but in care degrees. INT: If only the previous classification in care levels is known, choose the option "Only care degree known" to get to the classification according to care levels. 1: Care degree 1 2: Care degree 2 3: Care degree 3 4: Care degree 4 5: Care degree 5 7: Declined 8: Don't know DStich=1 [Baseline sample] | (DStich=0 [Panel sample] & Proxy=0 [TP]) --- DStich=0 [Panel sample] & Proxy>0 [Proxy] --- 9: Only care degree known	539 --- P5 --- 532b
532b (B/P) (ZP/Px)	322a=1|2|3|4 [NOT in care institution] & 523a=1|2 [is (strongly) restricted] & 524=1 [relies on help, care, support] & 525a C=1 [receive care-related assistance] & 532=1 [benefits covered by long-term nursing care insurance] & 532a=9 [Only care degree known] In what care level are you currently classified?	

	1: Care level 1 2: Care level 2 3: Care level 3 without hardship provision 4: Care level 3 with hardship provision 7: Declined 8: Don’t know DStich=1 [Baseline sample] | (DStich=0 [Panel sample] & Proxy=0 [TP]) --- DStich=0 [Panel sample] & Proxy>0 [Proxy]	 539 --- P5
533	Omitted.	
534	Omitted.	
535	Omitted.	
536	Omitted.	
537	Omitted.	
538	Omitted.	
539 (B/P) (ZP)	(DStich=1 [Baseline sample] | (DStich=0 [Panel sample] & Proxy=0 [TP])) & 322a=1|2|3|4 [NOT in Rest home] **Are there people you look after or care for regularly due to their poor state of health, either on a private or volunteer Baseline sample?** 1: Yes --- 2: No 7: Declined 8: Don’t know	 540 --- 561
540 (B/P) (ZP)	(DStich=1 [Baseline sample] | (DStich=0 [Panel sample] & Proxy=0 [TP])) & (322a=1|2|3|4 [NOT in Rest home] & 539=1 [support other person)) **Who do you assist in this way?** INT: Show Person Cards I and II and enter Person Code! INT: If respondant names person, who are not on the Person Cards: please note on Person Cards! INT: after 2. Person: If no other person are mentioned, use the button. PROG: allow only valid codes. PROG: prohibitmultiple answers for explicit person codes within the matrix (102 to 106; 201 to 208; 301 to 330; 501 to 505). PROG: paste from 2. Person answer button 'no further person mentioned'. Person 1: Person Code: _ _ _ 997: Declined 998: Don’t know Person 2: Person Code: _ _ _ 997: Declined 998: Don’t know Person 3: Person Code: _ _ _ 997: Declined 998: Don’t know 1: More than three people named	

541	Omitted.	
542	Omitted.	
543	Omitted.	
544 (B/P) (ZP)	(DStich=1 [Baseline sample] | (DStich=0 [Panel sample] & Proxy=0 [TP])) & (322a=1|2|3|4 [NOT in Rest home] & 539=1 [respondent support other person]) **Does the person you give (the most) support to currently receive regular benefits from the long-term care insurance?** 1: Yes 2: No 7: Declined 8: Don't know	
545	Omitted.	
546	Omitted.	
547	Omitted.	
548	Omitted.	
549	Omitted.	
550	Omitted.	
551	Omitted.	
552 (B/P) (ZP)	(DStich=1 [Baseline sample] | (DStich=0 [Panel sample] & Proxy=0 [TP])) & (322a=1|2|3|4 [NOT in Rest home] & 539=1 [support other person]) **What kind of care or assistance do you provide to the person who you help (the most)?** INT: Please read out examples! 1: Yes 2: No 7: Declined 8: Don't know A: Do you help aroand the house? B: Do you look after him/her or keep him/her company? C: Do you perform care services for the person you assis? D: Do you help in another way? ---------- 552 A=no or Declined or Don't know and B=no or Declined or Don't know and C=no or Declined or Don't know and D=no or Declined or Don't know	553 ---------- 561
553 (B/P) (ZP)	(DStich=1 [Baseline sample] | (DStich=0 [Panel sample] & Proxy=0 [TP])) & (322a=1|2|3|4 [NOT in Rest home] & 539=1 [support other person] & 552 A|B|C|D=1 [at least on 'yes' regarding the kind of assistance]) (540=1): **How much time do you spend per week helping the person you care for / assis?** (540>1): **How much time do you spend per week helping the person you care for / assis?** (All): **Please give a weekly average number of hours.** PROG.: Limit number of hours to 168 (24*7) About _ _ _ hours 997: Declined 998: Don't know	

554	Omitted.	
555	Omitted.	
556 (B/P) (ZP)	(DStich=1 [Baseline sample] | (DStich=0 [Panel sample] & Proxy=0 [TP])) & (322a=1|2|3|4 [NOT in Rest home] & 539=1 [support other person] & 552 A|B|C|D=1 [at least on 'yes' regarding the kind of assistance]]) **Looking at the care / assisance services you provide as a whole, how much of a burden are they for you? Would you say …** INT: Please read out examples! 1: not a burden at all 2: a minor burden 3: quite a burden 4: or a major burden? 7: Declined 8: Don't know	
557	Omitted.	
558	Omitted.	
559	Omitted.	
560	Omitted.	
	PROG: Timestamp	
	PULMONARY FUNCTION TEST	
561 (B/P) (ZP)	DStich=1 [Baseline sample] | (DStich=0 [Panel sample] & Proxy=0 [TP]) Pulmonary function test INT: Hold the device for the pulmonary function test in position to begin (with the attachment used to demonstrate the test and the mouthpiece and disinfectant wipe contained in the package). **Before continuing with the interview, we would like to conduct a brief test. This next test measures how fast you can exhale air out of your lungs.** **It is important that you blow as quickly and forcefully as you can.** **I would like you to do this test twice. When we're ready, I will ask you to stand up. Breathe in as deeply as you can.** **Open your mouth and close your lips tightly aroand the mouthpiece. Then blow into the mouthpiece as quickly and forcefully as you can, like this...** INT: Demonstrate the test by removing the demonstration attachment and using the disinfectant wipe to clean the unit where it was attached. Give the participant the instrument and a disposable mouthpiece. Let the participant unpack the mouthpiece him/herself and attach it firmly to the device. The participant should hold the device gently in one hand so that the opening is pointed away from the participant's hand. This prevents his/her fingers from blocking the opening. **Please stand up. Breathe in as deeply as you can. Open your mouth and close your lips tightly aroand the mouthpiece.** **Now blow into the mouthpiece as quickly and forcefully as you can.** INT: Please enter the value displayed. Value ander 60 = enter 960. Value over 880 = enter 990. Not conducted for health reasons = enter 992.	

	Participant attempted to conduct test but was unable = enter 993. Declined to participate = enter 997. Value: _ _ _ --- 561>990	--- P5
562 (B/P) (ZP)	(DStich=1 [Baseline sample] | (DStich=0 [Panel sample] & Proxy=0 [TP])) 561<990 [LuFu- test conducted for first time] INT: Set the value back at zero and repeat the test. INT: There should be a 30 second break between the two test attempts. **Now blow again into the mouthpiece as forcefully as you can.** INT: Please enter the value displayed. Value ander 60 = enter 960. Value over 880 = enter 990. Not conducted for health reasons = enter 992. Participant attempted to conduct test but was unable = enter 993. Declined to participate = enter 997. Value: _ _ _	
P5 (B/P) (ZP/Px)	INT: Don't read out! Was there an interruption in the module health that lasted at least one minute? 1: yes --- 2: no (DStich=1 [Baseline sample] | (DStich=0 [Panel sample] & Proxy=0 [TP] --- DStich=0 [Panel sample] & Proxy>0 [Proxy]	P5a --- 600 --- 600px
P5a (B/P) (ZP/Px)	P5=1 [interruption] How long did this interruption last? Please give me the break in minutes. _ _ _Minutes INT: If there were several interruptions please state the overall duration. INT: Please roand up on whole minutes. PROG: Min. value: 1. (DStich=1 [Baseline sample] | (DStich=0 [Panel sample] & Proxy=0 [TP] --- DStich=0 [Panel sample] & Proxy>0 [Proxy]	 600 --- 600px

Nr.	PERSONAL NETWORK	Continue with
	PROG: Timestamp	
600px (P) (Px)	Proxy>0 [Proxy] INT: Only read the following reminder if the proxy had difficulties with taking over the respondent's perspective. (PROG: green) (Proxy=1): **Please bear in mind that you continue to answer the questions from the perspective of Mr / Ms [<NAME TP>]** (Proxy=2): **Please also bear in mind that the questions are formulated to address Mr / Ms [<NAME TP>].**	
600 (B/P) (ZP/Px)	**We now want to look at people who are important to you and who you maintain regular contact with. These can include co-workers, neighbours, friends, acquaintances, relatives, and members of your household. Which people are important to you? If there are several, please just name the eight most important. Please give me these people´s first names and the first letters of their last names.** INT: Do not accept answers like "I know too many people" and continue with the aid of the following question **"Then please tell me the most important eight people."** INT: there is also a button “no person named” or “no one else named” (after the second person). INT: Please enter the person’s sex. Ask if necessary. PROG.: limit number of person to 8 PROG.: Enter all person named (maximum of 8) with name and sex! Then ask questions 601 to 606 for each person! INT: Enter all person named (maximum of 8) with name and sex! --- 1: No person named 7: Declined 8: Don’t know Proxy=0 [TP] --- Proxy>0 [Proxy]	600a --- 608 --- P6
	First Person – exemplary	
600a (B/P) (ZP/Px)	600≠1|7|8 [person in network] (1**. Person): Please give me the name of the first person you have regular contact with and who is important to you.** (Ab 2. Person): **Please give me the name of the next person you have regular contact with and who is important to you.** INT: If the respondent declines or does not know the child’s name please read out the following: (PROG: green**): „The name will be helpful in the following part of the interview to ensure about which person we talk. All data are evaluated exclusively in anonymous form. Data protection is fully and comprehensively guaranteed. If you want to, you can also use imaginary names.“** INT: Married couples count as two people. INT: There is also a button “no one else named” (after the second person) First name: _____ First letter of last name: _	

	7: Declined 8: Don't know 1. Person Button 995: no one named From 2. Person Button 95: no one else named Prog.: If the respondent declines to provide a name, the following questions must still be asked! --- When 2nd to 7th person Button 95: no other person Proxy=0 [TP] --- Proxy>0 [Proxy]	 600aa --- 608 --- P6
600aa (B/P) (ZP/Px)	600≠1|7|8 [person in network] & 600a≠95 [person generated, even if no name is mentioned] What is the sex of this person? INT: Please note the sex! Only ask if first name is unclear or if the respondent does not provide it! (PROG: green): **„please give me the person's sex".** PROG: If 600a=7,8 alow designation in 600aa. PROG: only allow appropiate values. 1: male 2: female 7: Declined 8: Don't know	
601 (B/P) (ZP/Px)	600≠1|7|8 [person in network] & 600a≠95 [person generated, even if no name is mentioned] **What is your relationship to [display person named in 600a]? Please give me the relevant code number from this Person Card.** INT: Show Person Cards I and II! INT: Please enter for each person the appropriate code from the personal card (e.g. child1 = 201, child 2=202, etc.) INT: If respondant names person, who are not on the Person Cards: please note on Person Cards! PROG.: Allow only provided values. PROG: Prohibit multiple anwers of explicit person codes within the matrix (102 to 106; 201 to 208; 301 to 330; 501 to 505). Code of Person Card: _ _ _ --- 601=201-204 [one of the children 1 to 4 named] & less than 8 persons named --- 601=201-204 & already 8 persons named & Proxy=0 [TP] --- 601=201-204 & already 8 persons named & Proxy>0 [Proxy] --- 601=106 [partner] & Proxy=0 [TP] --- 601=106 [partner] & less than 8 persons named & Proxy>0 [Proxy] --- 601=106 [partner] & already 8 persons named & Proxy>0 [Proxy] --- 997: Declined 998: Don't know	 602 --- 600a --- 607 --- P6 --- 606 --- 600a --- P6 ---

	less than 8 persons named	600a
	already 8 persons named & Proxy=0 [TP]	607
	already 8 persons named & Proxy>0 [Proxy]	P6
602 (B/P) (ZP/Px)	600≠1|7|8 [person in network] & 600a≠95 [person generated, even if no name is mentioned] & 601≠201 204 [no respondent's child 1 to 4] & 601≠106 [no respondent's partner] **How often do you have contact with [display person named in 600a] that is, through visits, letters, or telephone, SMS or e-mail?** INT: Show Blue list A! 1: Daily 2: Several times a week 3: Once a week 4: 1-3 times a month 5: Several times a year 6: Less often 7: Never 97: Declined 98: Don't know	603
	601=301-330 [respondent's Grandchild] & Proxy=0 [TP]	604
	601=301-330 [grandchild of respondent] & Proxy>0 [Proxy]	600a
	601=301-330 [grandchild of respondent] & Proxy>0 [Proxy] & 8 persons already named	P6
603 (B/P) (ZP/Px)	600≠1|7|8 [person in network] & 600a≠[person generated, even if no name is mentioned] & (601≠201- 204 [no child of respondent 1 to 4] & 601≠301-330 [no grandchild of respondent]) & 601≠106 [no partner of respondent] **How far away does [display person named in 600a] live from you at the moment?** INT: show green lis! 1: In the neighbourhood 2: In the same town 3: In another town, but it can be reached within two hours 4: Farther away, in Germany 5: Farther away, abroad 7: Declined 8: Don't know	
	Proxy>0 [Proxy]	600a
	Proxy>0 [Proxy] & already 8 persons named	P6
	Proxy=0 [Respondent]	604

604 (B/P) (ZP)	Proxy=0 [TP] 600≠1|7|8 [person in network] & 600a≠95 [person generated, even if no name is mentioned] & (601≠201-204 [no child of respondent 1 to 4] & 601≠106 [no partner of respondent]) **How close is your relationship to [Display person named in 600a] today?** INT: Show Blue list C! 1: Very close 2: Close 3: Morately close 4: Not very close 5: Not at all close 7: Declined 8: Don't know	
604a (B/P) (ZP)	Proxy=0 [TP] 600≠1|7|8 [person in network] & 600a≠95 [person generated, even if no name is mentioned] & (601≠201-204 [no child of respondent 1 to 4] & 601≠106 [no partner of respondent]) **How often are you and [name out of 600a] annoyed or angry with each other?** INT: show blue list D! 1: Never 2: Seldom 3: Sometimes 4: Often 5: Always 7: Declined 8: Don't know --- 601=301-330 [grandchild of respondent] --- 601=205-208 [one of the children 5 to 8 of the respondent] --- 601=205-208 [one of the children 5 to 8 of the respondent] & 8 people already mentioned	605 --- 606 --- 600a --- 607
605 (B/P) (ZP)	Proxy=0 [TP] 600≠1|7|8 [Person in network] & 600a≠95 [person generated, even if no name is mentioned] & (601≠201-208 [no respondent's child 1 to 8] & 601≠301-330 [no grandchild of respondent]) & 601≠106 [no partner of respondent]) **Can you tell me how old [display person named in 600]a is?** PROG: Max. value 996. PROG: three- digit _ _ _ years 997: Declined 998: Don't know	

606 (B/P) (ZP)	Proxy=0 [TP] 600≠1|7|8 [Person in network] & 600a≠95 [Person generated, even if no name was mentioned] & 601≠201208 [no child of respondent 1 to 8] **For how many years have you known each other?** PROG.: indication may not exceed years of age (from question 2) _ _ years 996: always 997: Declined 998: Don't know next person --- already 8 persons mentioned	 600a --- 607
607 (B/P) (ZP)	Proxy=0 [TP] 600 ≠1|7|8 [named person in network] & [already 8 persons mentioned] **If you could have named more than 8 persons who are important to you and with whom you have regular contact: how many additional persons would you have named?** _ _ persons 97: Declined 98: Don't know	
608 (B/P) (ZP)	Proxy=0 [TP] **We would now like to find out about your relationship with friends and acquaintances. How would you rate your present relationship with your friends and acquaintances?** INT: Show Orange list A! 1: Very good 2: Good 3: Average 4: Bad 5: Very bad 6: Does not apply 7: Declined 8: Don't know	 P6
609	Omitted.	
610	Omitted.	
P6 (B/P) (ZP/Px)	INT: Don't read out! Was there an interruption in the module personal network that lasted at least one minute? 1: yes --- 2: no Proxy=0 [TP] --- Proxy>0 [Proxy]	 P6a --- 700 --- 800px

P6a (B/P) (ZP/Px)	P6=1 [interruption] INT: Don’t read out! How long did this interruption last? Please give me the break in minutes. INT: If there were several interruptions please state the overall duration. INT: Please roand up on whole minutes. PROG: Min. value: 1. _ _ _Minutes ---------- Proxy=0 [TP] ---------- Proxy>0 [Proxy]	---------- 700 ---------- 800px

Nr.	SOCIAL SUPPORT	Continue with
	PROG: Timestamp	
700 (B/P) (ZP)	Proxy=0 [TP] **In the following questions, you can name both the people you have mentioned so far and different people as well.** **When you have important personal decisions to make, do you have anyone you can ask for advice?** 1: Yes --- 2: No 7: Declined 8: Don't know	701 --- 703
701 (B/P) (ZP)	Proxy=0 [TP] & 700=1 [name one adviser] **Which person or people are they?** INT: Show Person Cards I and II! Enter Code from Person Cards! INT: If respondant names person, who are not on the Person Cards: please note on Person Cards! INT: There is also a button "no one else named" (after the second person) PROG.: Accept only valid code! PROG.: Program a button ‚no further person' (from the second person). PROG.:All of the target subject already named person codes should remain visible (along with the person name). PROG: prohibit multiple designation of explicit person codes within these question (102 to 106; 201 bis 208; 301 to 330; 501 to 505). Person 1: Person Code:: _ _ _ 997: Declined 998: Don't know Person 2: Person Code: _ _ _ 997: Declined 998: Don't know Person 3: Person Code: _ _ _ 997: Declined 998: Don't know Person 4: Person Code: _ _ _ 997: Declined 998: Don't know Person 5: Person Code: _ _ _ From 2. Person Button 995: no other person 997: Declined	

	998: Don't know INT: Be further named? If yes, please explain:[green] **The program provides that I can record only 5 people. I will now proceed to the other questions.** 1: More than 5 person named 2: not more than 5 person named 7: Declined 8: Don't know	
702 (B/P) (ZP)	Proxy=0 [TP] & 700=1 [name advisor] **And how often in the past 12 months have you asked someone for advice in making an important decision. Was it …** INT: Please read out examples! 1: often 2: sometimes 3: seldom 4: or never 7: Declined 8: Don't know	
703 (B/P) (ZP)	Proxy=0 [TP] & **And how often in the past 12 months have others asked you for advice, for example, when they had to take an important decision? Was it …** INT: Please read out examples! 1: often 2: sometimes 3: seldom 4: or never 7: Declined 8: Don't know	
704 (B/P) (ZP)	Proxy=0 [TP] & **Do you have someone you can turn to when you need comfort or cheering up, for example, when you are feeling sad?** 1: Yes --- 2: No 7: Declined 8: Don't know	705 --- 707
705 (B/P) (ZP)	Proxy=0 [TP] & 704=1 [mentioned consolation giver] **Which person or people are they?** INT: Show Person Cards I and II! Enter Code from Person Cards! INT: If respondant names person, who are not on the Person Cards: please note on Person Cards! INT: There is also a button "no one else named" (after the second person) PROG.: Accept only valid codes! PROG.: Program a button ‚no further person' (from the second person) PROG.:All of the target subject already named person codes should remain visible (along with the person name).	

	PROG: prohibit multiple designation of explicit person codes within these question (102 bis 106; 201 bis 208; 301 bis 330; 501 bis 505). Person 1: Person Code: _ _ _ 997: Declined 998: Don't know Person 2: Person Code: _ _ _ 997: Declined 998: Don't know Person 3: Person Code: _ _ _ 997: Declined 998: Don't know Person 4: Person Code: _ _ _ 997: Declined 998: Don't know Person 5: Person Code: _ _ _ From 2. Person Button 995: no other person 997: Declined 998: Don't know INT: Be further named? If yes, please explain: (PROG: green) **"The program provides that I can record only 5 people. I will now proceed to the other questions".** 1: More than 5 person named 2: not more than 5 person named 7: Declined 8: Don't know	
706 (B/P) (ZP)	Proxy=0 [TP] & 704=1 [mentioned consolation giver] **And how often in the past 12 months did someone comfort you or cheer you up? Was it ...** INT: Please read out examples! 1: often 2: sometimes 3: seldom 4: or never 7: Declined 8: Don't know	

707 (B/P) (ZP)	Proxy=0 [TP] **And how often in the past 12 months did you comfort or cheer up others?** **Was it …** INT: Please read out examples! 1: often 2: sometimes 3: seldom 4: or never 7: Declined 8: Don't know	
708 (B/P) (ZP)	Proxy=0 [TP] **Apart from the care activities already mentioned and activities you do as part of your main job or a second job:** **Have you, in the past 12 months, helped someone who does not live in your household with housework such as cleaning, small repair jobs, or shopping?** 1: Yes --- 2: No 7: Declined 8: Don't know	709 --- 710
709 (B/P) (ZP)	Proxy=0 [TP] & 708=1 [supplied instrumental help] **Which person or people are they?** INT: Show Person Cards I and II! Enter Code from Person Cards! INT: If respondant names person, who are not on the Person Cards: please note on Person Cards! INT: There is also a button "no one else named" (after the second person) Progr.: Accept only valid codes! Progr.: Program a button ‚no further person' (from the second person). Progr.:All of the target subject already named person codes should remain visible (along with the person name). PROG: prohibit multiple designation of explicit person codes within these question (102 bis 106; 201 bis 208; 301 bis 330; 501 bis 505). Person 1: Person Code: _ _ _ 997: Declined 998: Don't know Person 2: Person Code: _ _ _ 997: Declined 998: Don't know Person 3: Person Code: _ _ _	

	997: Declined 998: Don't know Person 4: Person Code: _ _ _ 997: Declined 998: Don't know Person 5: Person Code: _ _ _ 997: Declined 998: Don't know INT: Be further named? If yes, please explain:[PROG: green] **The program provides that I can record only 5 people. I will now proceed to the other questions.** 1: More than 5 person named 2: not more than 5 person named 7: Declined 8: Don't know	
709a (B/P) (ZP)	Proxy=0 [TP] & 708=1 [supplied instrumental help] **And how often in the past 12 months did you help someone, <u>who does not live in this household</u>, privately with homework?** INT: Please read out examples! 1: often 2: sometimes 3: or seldom 7: Declined 8: Don't know	
710 (B/P) (ZP)	Proxy=0 [TP] **And what about the other way aroand: has someone who does not live in your household helped you in the past 12 months with housework such as cleaning, small repair jobs, or shopping?** 1: Yes --- 2: No 7: Declined 8: Don't know	711 --- 712
711 (B/P) (ZP)	Proxy=0 [TP] & 710=1 [received instrumental help] **Which person or people are they?** INT: Show Person Cards I and II! Enter Code from Person Cards! INT: If respondant names person, who are not on the Person Cards: please note on Person Cards! INT: There is also a button "no one else named" (after the second person) PROG.: Accept only valid codes!	

	PROG.: Program a button ‚no further person' (from the second person). PROG.:All of the target subject already named person codes should remain visible (along with the person name). PROG: prohibit multiple designation of explicit person codes within these question (102 bis 106; 201 bis 208; 301 bis 330; 501 bis 505). Person 1: Person Code: _ _ _ 997: Declined 998: Don't know Person 2: Person Code: _ _ _ 997: Declined 998: Don't know Person 3: Person Code: _ _ _ 997: Declined 998: Don't know Person 4: Person Code: _ _ _ 997: Declined 998: Don't know Person 5: Person Code: _ _ _ 997: Declined 998: Don't know INT: Be further named? If yes, please explain:[PROG: green] **The program provides that I can record only 5 people. I will now proceed to the other questions.** 1: More than 5 person named 2: not more than 5 person named 7: Declined 8: Don't know	
711a (B/P) (ZP)	Proxy=0 [TP] & 710=1 [received instrumental help] **And how often in the past 12 months did someone, <u>who does not live in this household</u>, help you with homework?** INT: Please read out examples! 1: often 2: sometimes 3: or seldom 7: Declined 8: Don't know	

712 (B/P) (ZP)	Proxy=0 [TP] & **Could you use more help or assisance such as …** INT: Vorgaben bitte vorlesen! Antwortvorgaben: 1: Yes 2: No (712=C [work in household] & 322a=5|6|7 [living in rest house]): 6: Does not apply, because in nursing home 7. Declined 8: Don't know A: advice in difficult situations B: cheering up C: help with household chores	
713 (B/P) (ZP)	Proxy=0 [TP] **Relationships with other people can also sometimes give rise to problems. Are there people who are causing you worry or concern at present?** 1: Yes 2: No 7: Declined 8: Don't know	 714
713a	Omitted.	
714 (B/P) (ZP)	Proxy=0 [TP] **Are there people who get on your nerves at the moment or who you often quarrel with?** 1: Yes 2: No 7: Declined 8: Don't know	 715
714a	Omitted.	
715 (B/P) (ZP)	Proxy=0 [TP] **Do you feel like there are people who often order you aroand or encroach on your independence?** 1: Yes 2: No 7: Declined 8: Don't know	 P7
715a.	Omitted.	
716.	Omitted.	
716a.	Omitted.	
717.	Omitted.	

P7 (B/P) (ZP)	Proxy=0 [TP] INT: Don’t read out! Was there an interruption in the module social support that lasted at least one minute? 1: yes ---------- 2: no	 P7a ---------- 800
P7a (B/P) (ZP)	Proxy=0 [TP] & P7=1 [interruption] INT: Don’t read out! INT: If there were several interruptions please state the overall duration. INT: Please roand up on whole minutes. PROG: Min. value: 1. How long did this interruption last? Please give me the break in minutes. _ _ _Minutes	 800

Nr.	FINANCIAL DEALINGS AND STANDARD OF LIVING	Continue with
	Timestamp	
800px (P) (Px)	Proxy>0 [Proxy] & DStich=0 [Panel sample] **Now to another topic. It deals with your material situation, i.e. your household income as well as property, assets and debts.** INT: Only read the following reminder if the proxy had difficulties with taking over the respoondent's perspective. (PROG: green) (Proxy=1): **As I said at the beginning, I would like to ask you to answer the questions from the perspective of Mr. / Ms. [<NAME TP>].** (Proxy=2): **As I said at the beginning, the questions continue to be formulated to address Mr. / Ms [<NAME TP>].**	802
800 (B/P) (ZP)	Proxy=0 [TP] **Many people give other people money or gift items, or support them financially. The recipients may include parents, child, grandchild or other relatives, or friends or acquaintances. What about you? Have you, in the past 12 months, given anyone money or major gift items, or provided anyone with regular financial support?** PROG.: For up to 4 people, allow questions 800A to 800D, then 800E 1: Yes --- 2: No 7: Declined 8: Don't know	800A --- 801

First person - exemplary

800A (B/P) (ZP)	{begin loop } Proxy=0 [TP] & 800=1 [endwoded money/things, financial support] **Who was it?** INT: Show Person Cards I and II! Enter Code from Person Cards! INT: If respondant names person, who are not on the Person Cards: please note on Person Cards! PROG: only allow valide codes. PROG: prohibit multiple designation of explicit person codes within loop (102 bis 106; 201 bis 208; 301 bis 330; 501 bis 505). – – – --- 997: Declined --- 998: Don't know --- PROG: After 2nd additional person: Button „no one else named"	800B --- 800D --- 800B --- 801

800B (B/P) (ZP)	Proxy=0 [TP] & 800=1 [endwoded money/things, financial support] | 800 A≠997 [Declined] **Did you give …** INT: Please read out examples! Multiple responses possible! PROG.: Allow multiple responses. A: gifts of money B: major gift items C: regular financial support D: or other (please note) _____ 1: Mentioned 0: Not mentioned 7: Declined 8: Don't know	
800C (B/P) (ZP)	Proxy=0 [TP] & 800=1 [endwoded money/things, financial support] | 800 A≠997 [Declined] **If you add all the gifts together, about how much would their value amount to over the past 12 months?** INT: Show list 800 and ask for Code Letter! PROG.: Accept only valid codes letters! A: less than 250 EUR B: 250 to less than 500 EUR C: 500 to less than 1,000 EUR D: 1,000 to less than 2,500 EUR E: 2,500 to less than 5,000 EUR F: 5,000 to less than 10,000 EUR G: 10,000 EUR or more Code Letter: _ _ 7: Declined 8: Don't know	
800D (B/P) (ZP)	{end loop } Proxy=0 [TP] & 800=1 [endwoded money/things, financial support] **800D. Is there someone else you have given money or major gift items to in the past 12 months?** 1: Yes Progr.: Continue with the next person Progr.: If already 4 person named, continue with question --- 2: No 7: Declined 8: Don't know	 800A 800E --- 801

800E (B/P) (ZP)	Proxy=0 [TP] & 800=1 [endwoded money/things, financial support] & 800D=1 [yes former Person] & more than 4 person mentioned **Which people were they? For further person the entry of person codes will do.** INT: Show Person Cards I and II! Enter Code from Person Cards! INT: If respondant names person, who are not on the Person Cards: please note on Person Cards! INT: There is also a button “no one else named”. PROG: only allow valide codes. PROG: prohibit multiple designation of explicit person codes within this question including in loop for 800A mentionded codes (102 bis 106; 201 bis 208; 301 bis 330; 501 bis 505). Prog.: Limit to three digits. Progr.: Force entry. PROG: allow maximal three further designations. 5. Person: Code _ _ _ 997: Declined 998: Don’t know 6 Person: Code _ _ _ 995: no one else named 997: Declined 998: Don’t know 7. Person: Code _ _ _ 995: no one else named 997: Declined 998: Don’t know	
801 (B/P) (ZP)	Proxy=0 [TP] **And the other way aroand: have you, in the past 12 months, been given money, major gift items, or financial support?** PROG.: for up to 4 people, allow questions 800A to 800D, then 800E 1: Yes --- 2: No 7: Declined 8: Don’t know	801A --- 801F

First Person - exemplary

801A (B/P) (ZP)	{begin loop } Proxy=0 [TP] & 801=1 [received money/things, received fincancial support] **Who did the gift(s) come from?** INT: Show Person Cards I and II! Enter Code from Person Cards! INT: If respondant names person, who are not on the Person Cards: please note on Person Cards!	

	PROG: prohibit multiple designation of explicit person codes within loop (102 bis 106; 201 bis 208; 301 bis 330; 501 bis 505). PROG: allow only valid codes. _ _ _ --- 997: Declined --- 998: Don't know --- PROG: After 2nd additional person: Button „no one else named"	 801B --- 801D --- 801B --- 801F
801B (B/P) (ZP)	Proxy=0 [TP] & 801=1 [received money/things, received fincancial support] | 801 A≠997 [Declined] **Were the gifts …** INT: Please read out examples! Multiple responses possible! PROG.: Allow multiple responses. A: gifts of money B: major gift items C: regular financial support D: or other (please note): _____ 1: Mentioned 0: Not mentioned 7: Declined 8: Don't know	
801C (B/P) (ZP)	Proxy=0 [TP] & 801=1 [received money/things, received fincancial support] | 801 A≠997 [Declined] **If you add this all together, how much would it amount to over the past 12 months?** INT: Show list 800 and ask for Code Letter! PROG.: Allow only valid codes. Display lis of possible answers on the screen. A: less than 250 EUR B: 250 to less than 500 EUR C: 500 to less than 1,000 EUR D: 1,000 to less than 2,500 EUR E: 2,500 to less than 5,000 EUR F: 5,000 to less than 10,000 EUR G: 10,000 EUR or more Code Letter: _ _ 7: Declined 8: Don't know	
801D (B/P) (ZP)	{end loop } Proxy=0 [TP] & 801=1 [received money/things, received fincancial support] **Is there someone else you have received money or larger gift items from in the past 12 months?** 1: Yes Progr.: Continue with the next person (question 801A) Progr.: If already 4 person named, continue with question	 801A 801E

	--- 2: No 7: Declined 8: Don’t know	---------- 801F
801E (B/P) (ZP)	Proxy=0 [TP] & 801=1 received money/things, received fincancial support] & 801D=1 [yes former person] & mentioned more than 4 person **Which people were they? For further person the entry of person codes will do.** INT: Show Person Cards I and II! Enter Code from Person Cards! INT: If respondant names person, who are not on the Person Cards: please note on Person Cards! INT: There is also a button “no one else named”. PROG: prohibit multiple designation of explicit person codes within this question including in loop for 801A mentionded codes (102 bis 106; 201 bis 208; 301 bis 330; 501 bis 505). PROG: only allow valid codes. PROG.: Limit to three digits. PROG.: Force entry. PROG: allow max three further designations. 5. Person: Code _ _ _ 997: Declined 998: Don’t know 6. Person: Code _ _ _ 995: no one else named 997: Declined 998: Don’t know 7. Person: Code _ _ _ 995: no one else named 997: Declined 998: Don’t know	
801F (B/P) (ZP)	Proxy=0 [TP] **Many people make occasional or regular donations to charitable, social, or humanitarian causes. Please think back: have you made any such donations in the past 12 months?** 1: Yes --- 2: No 7: Declined 8: Don’t know	 801G ---------- 802

801G (B/P) (ZP)	Proxy=0 [TP] & 801F=1 [donated] **Approximately how much did all of your donations in the last 12 months add up to in total?** PROG: Min. value is 1. About _ _ _ _ _ _ _ _ _ _ € 9999999997: Declined 9999999998: Don't know	 802
801H	Omitted.	
802 (B/P) (ZP/Px)	**What is the total net monthly income of your household? By that, I mean the sum total of all wages / salaries, income from self-employment, and retirement benefits after deduction of all tax and social security contributions. Please include income from public aid, income from rentals and leases, interest, child benefits and other sources of income.** INT: upon request: (PROG: green) **A household is defined by all person that live together and joint their housekeeping.** PROG: Min. value is 1. _ _ _ _ _ _ € monthly --- 999997: Declined 999998: Don't know	 802a --- 803
802a (B/P) (ZP/Px)	INT: Please specify! Was the amount estimated by the target person or proxy? 1: Yes, the amount was estimated 2: No, the target person / proxy has specified the exact amount --- Proxy=0 [TP] --- Proxy>0 [Proxy]	 --- 804 --- 809px
803 (B/P) (ZP/Px)	802=999997|999998 [missing] **As with all information obtained in this interview, your data will of course remain anonymous and cannot be traced back to you. The results of the survey will also be analyzed in terms of income. For this purpose, all we need to know are basic income groups. It would be helpful if you could tell us which income group you belong to. Please just give me the letter on this lis that corresponds to your household net income.** INT: Show list 803! Progr.: Accept only valid codes! Code Letter: __ 7: Declined 8: Don't know --- Proxy=0 [TP] --- Proxy>0 [Proxy]	 --- 804 --- 809px

804 (B/P) (ZP)	Proxy=0 [TP] **This question concerns the estimation of your standard of living, that is, what you are able to afford. How would you rate your current standard of living?** INT: Show Orange list A! 1: very good 2: good 3: average 4: bad 5: very bad 7: Declined 8: Don't know	
805 (B/P) (ZP)	Proxy=0 [TP] **How has your standard of living changed over the past** [DStich=1: **10**, DStich=0: **3]** **years?** INT: Show Orange list B! 1: Has improved greatly 2: Has improve somewhat 3: Has stayed the same 4: Has worsened somewhat 5: Has gotten much worse 7: Declined 8: Don't know	
806 (B/P) (ZP)	Proxy=0 [TP] **And if you think about the future, how do you expect your standard of living to change in the future?** INT: Show Orange list C! 1: Will improve greatly 2: Will improve somewhat 3: Will remain the same 4: Will worsen somewhat 5: Will get much worse 7: Declined 8: Don't know	
807.	Omitted.	
808 (B/P) (ZP)	Proxy=0 [TP] According to your estimation, what is the absolutely lowest net income per month that your household would need to gett along financially? Please answer to this question having regard to your current living conditions and considering your personal understanding of ‚getting along financially'. PROG: Min. value is 1. ca. _ _ _ _ _ _ _ _ _ _ Euro	

	9999999997: Declined 9999999998: Don't know	899
809px (P) (Px)	Proxy>0 [Proxy] & DStich=0 [Panel sample] **Have you or your spouse/ partner ever received an inheritance?** **Please do not overlook smaller bequests.** 1: Yes --- 2: No 7: Declined 8: Don't know	810px --- 812px
810px (P) (Px)	Proxy>0 [Proxy] & DStich=0 [Panel sample] & 809px=1 [inheritance] **Who did you receive the inheritance from? Please tick all people from whom you have received an inheritance!** INT: Show list 810px! PROG: Allow multiple responses. 1: My parents 2: Parents of spouse/partner 3: Grandparents 4: Grandparents of spouse/partner 5: Spouse/partner 6: Brothers or sisters 7: Others (please specify): _____ 1: Named 0: Didn't name 7: Declined 8: Don't know	
811px (P) (Px)	Proxy>0 [Proxy] & DStich=0 [Panel sample] & 809px=1 [inheritance] **If you add it all together, what would be the approximate value of these inheritances today?** INT: Show list 811px! 1: Less than 2,500 EUR 2: 2,500 and more, but less than 12,500 EUR 3: 12,500 and more, but less than 50,000 EUR 4: 50,000 and more, but less than 250,000 EUR 5: 250,000 and more, but less than 500,000 EUR 6: 500,000 EUR or more 97: Declined 98: Don't know	

812px (P) (Px)	Proxy>0 [Proxy] & DStich=0 [Panel sample] **Do you or your spouse/ partner own a house, appartment, or land?** 1: Yes --- 2: No 7: Declined 8: Don‘t know	813px --- 816px
813px (P) (Px)	Proxy>0 [Proxy] & DStich=0 [Panel sample] & 812px=1 [inheritance] **What kind of property is this? Please specify everything that applies.** INT: Show list 813px! PROG: Allow multiple responses. 1A: Detached house, row house, 1 semi-detached house 2B: Multi-family home 3C: Apartment 4D: Vacation home or apartment 5E: Other property 1: Named 0: Didn‘t name 7: Declined 8: Don‘t know	
814px (P) (Px)	Proxy>0 [Proxy] & DStich=0 [Panel sample] **Do you or your spouse/ partner have any debts to pay off as a result of acquiring property?** 1: Yes --- 2: No 7: Declined 8: Don‘t know	815px --- 816px
815px (P) (Px)	Proxy>0 [Proxy] & DStich=0 [Panel sample] & 814px=1 [property debts] **What is the amount about?** INT: show list 811px! 1: Less than 2,500 EUR 2: 2,500 and more, but less than 12,500 EUR 3: 12,500 and more, but less than 50,000 EUR 4: 50,000 and more, but less than 250,000 EUR 5: 250,000 and more, but less than 500,000 EUR 6: 500,000 EUR or more 97: Declined 98: Don‘t know	

816px (P) (Px)	Proxy>0 [Proxy] & DStich=0 [Panel sample] **Do you or your spouse/partner have any of the types of assets or valuables listed below? Please tick everything that applies.** PROG: Show items one by one. INT: Show list 816px! Please read the examples! 1: A: Bank accounts, checking accounts or savings accounts 2: B: Fixed-interest securities 3: C: Shares 4: D: Shares in investment funds (equity funds, money market funds, property funds, mixed funds, etc.) 5: E: Building loan agreements 6: F: Term life insurance 7: G: Capital life insurance 8: H: Other private pension plans 9: J: Valuables 10: K: I (we) do have assets/valuables listed but I do not know which ones 1: Yes 2: No 7: Declined 8: Don’t know --- PROG: If A to K min. 1 time „1: yes“ --- PROG: All others	--- 817px --- 819px
817px (P) (Px)	Proxy>0 [Proxy] & DStich=0 [Panel sample] & 816px=1 [Presence of investments/valuables] **For several years now, the government has been providing tax breaks or allowances to people who put away money for retirement (for example, through the “Riester-Rente” pension scheme). Is one of your investments part of a state-sponsored pension scheme?** 1: Yes 2: No 7: Declined 8: Don’t know	
818px (P) (Px)	Proxy>0 [Proxy] & DStich=0 [Panel sample] & 816px=1 [Presence of investments/valuables] **When you think of all your assets, that is, savings accounts, building contracts, life insurance, bonds, and valuables belonging to you or your spouse/partner, with the exception of real estate: What does it all amount to roughly?** INT: Show list 818px! 1: Less than 500 EUR 2: 500 and more, but less than 2,500 EUR 3: 2,500 and more, but less than 5,000 EUR 4: 5,000 and more, but less than 12,500 EUR 5: 12,500 and more, but less than 25,000 EUR 6: 25,000 and more, but less than 50,000 EUR	

	7: 50,000 and more, but less than 100,000 EUR 8: 100,000 and more, but less than 250,000 EUR 9: 250,000 and more, but less than 500,000 EUR 10: 500,000 EUR or more PROG.: Button 95: I (we) have no assets 97: Declined 98: Don't know	
819px (P) (Px)	Proxy>0 [Proxy] & DStich=0 [Panel sample] **Have you or your spouse/ partner had to fall back on your savings or assets over the past 12 months?** 1: Yes --- 2: No 7: Declined 8: Don't know	820px --- 822px
820px (P) (Px)	Proxy>0 [Proxy] & DStich=0 [Panel sample] & 819px=1 [fell back on your savings/assets] **For what purposes have you or your spouse/ partner had to fall back on your savings or assets over the past 12 months? Please tick everything that applies!** PROG: Allow multiple answers. A: for normal everyday things B: for special purchases C: for the apartment / house D: for vacations E: to support family members G: for another purpose (please specify): _____ 1: Named 0: Didn't name 7: Declined 8: Don't know	
821px (P) (Px)	Proxy>0 [Proxy] & DStich=0 [Panel sample] & 819px=1 [fell back on your savings/assets] **What would be your rough estimate of how much it added up to in all over the past 12 months?** PROG: Minimal value is 1. _ _ _ _ _ Euro per month 999997: Declined 999998: Don't know	

822px (P) (Px)	Proxy>0 [Proxy] & DStich=0 [Panel sample] **Apart from mortgages: do you or your spouse / partner have any debts at the moment from loans, i.e., from a bank or savings bank, store or mail order company, or a private individual?** 1: Yes --- 2: No 7: Declined 8: Don't know	823px --- 899
823px (P) (Px)	Proxy>0 [Proxy] & DStich=0 [Panel sample] & 821px=1 [credit debt] **What is the amount about?** INT: Show list 818px! 1: Less than 500 EUR 2: 500 and more, but less than 2,500 EUR 3: 2,500 and more, but less than 5,000 EUR 4: 5,000 and more, but less than 12,500 EUR 5: 12,500 and more, but less than 25,000 EUR 6: 25,000 and more, but less than 50,000 EUR 7: 50,000 and more, but less than 100,000 EUR 8: 100,000 and more, but less than 250,000 EUR 9: 250,000 and more, but less than 500,000 EUR 10: 500,000 EUR or more PROG.: Button 95: I (We) do not have any debts 97: Declined 98: Don't know	
	PROG: Timestamp	
899 (B/P) (ZP/Px)	PROG: DStich=1 [Baseline sample] | (DStich=0 [Panel sample] & Proxy=0 [TP]): **Thank you for your cooperation.** PROG: DStich=0 [Panel sample] & Proxy>0 [Proxy]: **We hope that you have enjoyed answering these questions for us.**	
P8 (B/P) (ZP/Px)	INT: Don't read out! Was there an interruption in the module FINANCIAL DEALINGS AND STANDARD OF LIVING that lasted at least one minute? 1: Yes --- 2: No Proxy=0 [TP] & P8=2 & DStich=1 [Baseline sample] --- Proxy=0 [TP] & P8=2 & DStich=0 [Panel sample] --- Proxy =2 [Proxy & TP] --- Proxy=1 [nur Proxy]	P8a --- 900 --- 901 --- Address1 --- 1000px

P8a (B/P) (ZP/Px)	P8=1 [Unterbrechung] INT: Don’t read out! INT: If there were several interruptions please state the overall duration. INT: Please roand up on whole minutes. PROG: Min. value: 1. How long did this interruption last? Please give me the break in minutes. _ _ _Minutes Proxy=0 [TP] & DStich=1 [Baseline sample] --- Proxy=0 [TP] & DStich=0 [Panel sample] --- Proxy =2 [Proxy & TP] --- Proxy=1[nur Proxy]	900 --- 901 --- Address1 --- 1000px

Nr.	WILLINGNESS TO PARTICIPATE IN PANEL SURVEY AND "DIGIT-SYMBOL-TEST"	Continue with
900 (B) (ZP)	DStich=1 [Baseline sample] INT: Please read aloud! In conclusion, we would like to turn to another matter. Although it has not yet been decided, we are considering continuing this research project at a later date with a further survey. If so, would you be interested in taking part again? Your cooperation is very valuable to us, and we would be very glad if you did decide to do so. We thank you in advance for your willingness to participate! We would need to keep your address on file for use in a future survey. Data protection legislation quite rightly requires your prior agreement for this, and we hereby childly request your permission. Your address will be kept separate from the questionnaire and will be used exclusively for the purposes of a further survey; it can never be linked with the answers you have given, and the information you have supplied will remain completely anonymous. When this research project is completed, your address will be deleted. We would deeply appreciate if you did decide to continue to participate in our research project. INT: Please hand out yellow Panel sample sheet to be filled out by respondent. Enter serial number and return to Infas with the questionnaire. INT: Important: please tick! 1: Respondent completed Panel sample sheet 2: Respondent did not complete Panel sample sheet	
	PROG: Timestamp	
901 (B/P) (ZP)	DStich=1 [Baseline sample] | (DStich=0 [Panel sample] & Proxy=0 [TP]) INT: Please consult Task Sheet "DIGIT-SYMBOL-TEST"! **Now that our discussion is over, I would like to ask you if you would be willing to take part in one last exercise. It will take about two minutes. It relates to speed of thought and association. We would like this information to be included in our findings.** INT: The exercise requires: (1) a stopwatch or a watch with a second hand, (2) a good pen or pencil for the interviewee (soft pencil or ballpoint pen) plus (3) the Task list (do not forget to enter serial number of person in the Task Lis!). The object of this exercise is to assign the numbers from 1 to 9 to a specific symbol. The number belonging to each of the symbols is shown at the top of the Task Sheet. The symbols must be entered by the respondent in the empty spaces ander the numbers. The first seven examples above the thick black line in the top row of tasks help to explain the exercise. The respondent completes the Task Sheet alone. It should be ensured that the respondent completes one problem after the next (in order) and does not start with all the symbols assigned to Figure 1 and then all symbols assigned to Figure 2, etc. The task is to be completed in 90 seconds, or one and a half minutes. Please emphasize the speed factor. INT: Point to the key in the top section of the Task Sheet. **Please look at this horizontally split box or square. Note that each box contains a number in the upper half and a small symbol in the lower half. A different symbol has been assigned to each number.** INT: Point to the example boxes. **Now here, you see boxes with numbers where the lower half of the box is empty.Please insert the number that belongs to the symbol in the blank; In this case,**	

	the number assigned to the symbol is "8", so we write in this number. INT: Here you should enter the corresponding symbol in the first blank (an upside-down "V") **Here is a "9", so we insert its symbol here; here is a "7", so we insert its symbol here.** INT: You should enter the corresponding symbols. After giving these four examples, pose the following question and point to the next blank: **What should be inserted here?** INT: If the respondent gives the wrong answer, correct him / her. Repeat the question "What should be inserted here?" with the next examples. After completing the seven examples, say: **Now you start here and fill in as many blanks as you can until I say "stop", without leaving any out.** Set the stopwatch or look at the second hand of the watch and give the respondent 90 seconds to complete the task! After 90 seconds have elapsed, say: **Please stop!** INT: Important: please tick! 1: Respondent completed Task Sheet 2: Respondent did not complete Task Sheet	
	PROG: Timestamp	
902 (B/P) (ZP)	DStich=1 [Baseline sample] | (DStich=0 [Panel sample] & Proxy=0 [TP]) **Thank you very much for participating until this point.** **To shorten the time of interviewing, a questionnaire which contains some deepening questions is part of this survey.** **You have the opportunity to complete the questionnaire on paper or online.** **On the front of the paper questionnaire you will find the link to the online survey and your personal access code. If you enter this link in your internet browser, you will come to the online questionnaire.** INT : For inquiries about online filling: [Progr: in green] - The online questionnaire automatically guides you, and processing is usually time-saving. [Progr: in grün] - For processing the online questionnaire, there is no indication of personal contact data, such as personal information, e.g. address, telephone number or e-mail address. INT: If the target subject wishes, you can assist with filling out the written questionnaire or arrange a date to pick up the questionnaire. 1: questionnaire is left with target subject 2: questionnaire is filled out together with the target subject --- 3: target subject cannot fill out the questionnaire for health reasons 7: target subject is declined filling out the written questionnaire	902a --- 902p

902p (B/P) (ZP)	INT: Have you agreed with the target person to leave the yellow questionnaire for the target person? 1: Yes, yellow questionnaire was left for target person. --- 2: No, no yellow questionnaire was left.	 902a --- Address1
902a (B/P) (ZP)	INT: Please enter the following LFD in the space provided on the title page of the paper questionnaire. PROG: show <LFD> 1: Transfer LFD to paper questionnaire	
902b (B/P) (ZP)	INT: Please enter the 10-digit access code below. You will find it on the title page of the paper questionnaire. Access code: _ _ _ _ _ _ _ _ _ _ PROG: allow exactly 10 digits PROG: match entered code with codelist in Ufile Access code = valid Code --- Access code != valid Code	 902d --- 902c
902c (B/P) (ZP)	DStich=1 [Baseline sample] | (DStich=0 [Panel sample] & Proxy=0 [TP]) 902b != valid Code INT: ATTENTION! The entered access code does not match the valid codes. Please check your entry. 1: back to entering the access code	 902b
902d (B/P) (ZP)	DStich=1 [Baseline sample] | (DStich=0 [Panel sample] & Proxy=0 [TP]) 902a==902b INT: Now give the TP the yellow questionnaire! INT: For inquiries about online completion: [PROG: in green] - On the front is the link - the Internet address - which you must enter at the top of the Internet window to access the online survey. There you can then enter your personal access code. [PROG: in green] - For the processing of the online questionnaire are no details of personal contact data, such. their address, telephone number or e-mail address [**PROG**: in green] - Show the target person the internet address and the access code on the front of the yellow paper questionnaire and, if necessary, the filling instructions on the second page. **You can fill in the questionnaire today or in the next few days.** 1: further on	
	PROG: Timestamp	

Nr.	ADDRESS RECORDING AND PLANS TO MOVE	Continue with
Address 1 (B/P) (ZP/Px)	**In the run-up to the survey, we sent you a cover letter with information about the study. Did you receive this letter?** 1: yes --- 2: no 7: declined 8: don't know	 Address2 --- Address3
Address 2 (B/P) (ZP/Px)	**Was the letter sent to your current address or was it forwarded by a relative or the post office?** 1: Letter was delivered to the currently valid address --- 2: Letter was forwarded by the post office 3: Letter was forwarded by relatives or acquaintances 7: declined 8: don't know	 Address4 --- Address3
Address 3 (B/P) (ZP/Px)	**So that we can send you our thanks for taking part in our survey and that you can be contacted again for further survey, may I briefly record your address again?** INT: All information must be complete and spelled correctly! If in doubt, ask for spelling. 1: continue to address recording 7: declined 8: don't know	 Address4
Address 4 (B/P) (ZP/Px)	In order for us to be able to reach you in the event of a move, it would be very helpful if you could already tell us whether you plan to move in the foreseeable future. Do you plan to move in the next 12 months? 1: yes --- 2: no 7: declined 8: don't know	 Address5 --- Address6
Address 5 (B/P) (ZP/Px)	**Where do you want to move? Please tell us the exact address.** INT: All information must be complete and spelled correctly! If in doubt, ask for spelling. INT: If the exact address is not known, the collect place (in the case of cities and districts). 1: Continue to address recording --- 7: Declined 8: Don't know	 --- Address6

Address 5b (B/P) (ZP/Px)	**When will you probably move there?** Month 97: Declined 98: Don‘t know Year: 9997: Declined 9998: Don’t know	
Address 6 (B/P) (ZP/Px)	**In order to be able to reach you again next time, there are various possibilities that we would like to use. Therefore, it would be helpful if you could give me, for example, your mobile phone number and / or your e-mail address.** INT: All information must be complete and spelled correctly! If in doubt, ask for spelling. 1: Continue to collect mobile phone number / e-mail 7: Declined 8: Don’t know Proxy=0 [TP] --- Proxy>0 [Proxy]	 903a --- 1000px
903a (B/P) (ZP)	DStich=1 [Baseline sample] | (DStich=0 [Panel sample] & Proxy=0 [TP]) **Thank you a lot again!** INT: Attention, please do not forget the following questions! An interview is only successfully completed when the following questions (so-called interviewer questions) have been answered. INT: Don’t read out. Can the interview questions be answered now or must the interview be interrupted at this point so that the interview questions can be answered later? (PROG: green) 1: to Interviewquestions (PROG: green) 2: interview interrupted, please choose nearby appointment --- DStich=1 [Baseline sample] & 903a=1 DStich=0 [Panel sample] & Proxy=0 [TP] & 903a=1	 --- 1px

Nr.	PROXY QUESTIONS	Continue with
1000px (P) (Px)	DStich=0 [Panel sample] & Proxy>0 [Proxy] INT: Addressed to proxy. **Finally, we would like to ask you some questions that are related to you and your relationship with Mr /Ms [<Name TP>].** **Please answer the follow-up questions in your own perspective.** **It will take less than five minutes.** INT: Do not ask a question! Sex oft he proxy 1: Male 2: Female	
1001px (P) (Px)	DStich=0 [Panel sample] & Proxy>0 [Proxy] **Please tell me your date of birth.** Day: _ _ Month: _ _ Year: _ _ _ _ 97: Declined 97: Declined 9997: Declined 98: Don't know 98: Don't know 9998: Don't know	
1002px (P) (Px)	DStich=0 [Panel sample] & Proxy>0 [Proxy] **What's your relationship with Ms / Mr [<NAME TP>]?** 1: spouse, life partner 2: son (son-in-law) / daughter (daughter-in-law) 3: father (father-in-law) / mother (mother-in-law) 4: brother / sister 5: other relative 6: friend or acquaintance 7: carer 8: other relationship (please note): _____	
1003px (P) (Px)	DStich=0 [Panel sample] & Proxy>0 [Proxy] **How far away are you currently living from Ms / Mr [<NAME TP>]?** INT: Show Green List! 1: In the same house or household 2: In the neighborhood 3: In the same place 4: Other location, but reachable within 2 hours 5: Further away, in Germany 6: Further away, abroad 7: Declined 8: Don't know	

1004px (P) (Px)	DStich=0 [Panel sample] & Proxy>0 [Proxy] **How often have you on average had contact with Ms / Mr [<NAME TP>] over the past 12 months? E.g. through visits, phone calls, letters, SMS or email?** INT: Show Blue List A! 1: Daily 2: Several times a week 3: Once a week 4: 1 to 3 times a month 5: Several times a year 6: Rare 7: Never 97: Declined 98: Don‘t know	
1005px (P) (Px)	DStich=0 [Panel sample] & Proxy>0 [Proxy] **How close do you feel to Ms / Mr [<NAME TP>]?** INT: Show Blue List C! 1: Very close 2: Close 3: Middle 4: Less close 5: Not close at all 7: Declined 8: Don’t know --- DStich=0 [Panel sample] & Proxy>0 [Proxy] & 322a=1|2|3|4 [NICHT in Heimeinrichtung] & 523a=1|2 [ist (stark) eingeschränkt] & 524=1 [ist auf Hilfe, Pflege, Unterstützung angewiesen] --- All others	--- 1006px --- 1008px
1006px (P) (Px)	DStich=0 [Panel sample] & Proxy>0 [Proxy] & 322a=1|2|3|4 [NOT in care] & 523a=1|2 [is (strongly) restricted] & 524=1 [is dependent on help, care, support] **Regarding the issues of health, you informed us that Mr./Ms. [<NAME TP>] needs help, care or support. Do you help Ms / Mr [<NAME TP>] regularly?** 1: Yes --- 2: No 7: Declined 8: Don’t know	1007px --- 1008px
1007px (P) (Px)	DStich=0 [Panel sample] & Proxy>0 [Proxy] & 322a=1|2|3|4 [NOT in care] & 523a=1|2 [is (strongly) restricted] & 524=1 [is dependent on help, care, support] & 1006px=1 **How much time do you spend a week to help Ms / Mr [<NAME TP>]? Please indicate the average number of hours per week.** PROG: Limit the number of hours from 1 to 168 (24*7).	

	About _ _ _ hours 997: Declined 998: Don’t know	
1008px (P) (Px)	DStich=0 [Panel sample] & Proxy>0 [Proxy] **The interview is over. Thank you again!** INT: Attention, please do not forget the following questions! An interview is only successfully completed when the following questions (so-called interviewer questions) have been answered. INT: Don’t read out. Can the interview questions be answered now or must the interview be interrupted at this point so that the interview questions can be answered later? (PROG: green) 1: to Interviewquestions (PROG: green) 2: interview interrupted, please choose nearby appointment ---------- DStich=0 [Panel sample] & Proxy>0 [Proxy] & 1008px=1	---------- 1px

Nr.	INTERVIEWER QUESTIONS	Continue with
1px (P) (Px)	DStich=0 [Panel sample] & Proxy>0 [Proxy] From here complete without target person and / or proxy! **Why was a proxy interview necessary?** PROG: Allow multiple answers. PROG: for Proxy=2 [Proxy&TP] do not assign a value for item 4 (not even "0") 1: due to physical impairment of the target person 2: due to psychological or cognitive impairment of the target person 3: from unspecified health impairments of the target person PROG: Proxy=1 [only Proxy]: 4: Target person is absent during the field time for health reasons (hospital / rehabilitation stay) and therefore can not attend the interview himself/helself 5: Other reasons (please note): _____ DStich=0 [Panel sample] & Proxy=1 [only Proxy] --- DStich=0 [Panel sample] & Proxy=2 [Proxy & TP]	 4px --- 4
1 (B/P) (ZP)	DStich=1 [Baseline sample] | (DStich=0 [Panel sample] & Proxy=0 [TP]) To be completed from here on without respondent! **Was the interview conducted alone with the respondent or was a third party present during interview? If so, who?** INT: Multiple responses possible! PROG: allow multiple choice. PROG: Code 1 (Answer A) can not be entered with others. A: Interview alone with respondent --- B: Spouse / partner present C: Child present D: Other family members present E: Other person present (please note): _____	 4 --- 3
3 (B/P) (ZP)	(DStich=1 [Baseline sample] & 1≠A [Interview was NOT filled with respondent alone]) | (DStich=0 [Panel sample] & Proxy=0 [TP] & 1≠A [Interview was NOT filled with respondent alone] Did any of the person present intervene in the interview? 1: Yes, occasionally 2: Yes, often 3: No	

4 (B/P) (ZP/Px)	DStich=1 [Baseline sample] | (DStich=0 [Panel sample] & Proxy=0 [TP]) | (DStich=0 [Panel sample] & Proxy=2 [Proxy & TP]) How would you describe the willingness of the respondent to answer the questions? 1: Good 2: Average 3: Bad 4: Initially good, then worsened 5: Initially bad, then improved DStich=1 [Baseline sample] | (DStich=0 [Panel sample] & Proxy=0 [TP]) --- Proxy=2 [Proxy & TP]	 5 --- 4px
4px (P) (Px)	DStich=0 [Panel sample] & Proxy>0 [Proxy] **How would you describe the willingness of the proxy to answer the questions?** 1: Good 2: Average 3: Bad 4: Initially good, then worsened 5: Initially bad, then improved DStich=0 [Panel sample] & Proxy=1 [nur Proxy] --- DStich=0 [Panel sample] & Proxy=2 [Proxy & TP]	 5px --- 5
5 (B/P) (ZP/Px)	DStich=1 [Baseline sample] | (DStich=0 [Panel sample] & Proxy=0 [TP]) | (DStich=0 [Panel sample] & Proxy=2 [Proxy & TP]) **How would you rate the information supplied by respondent?** 1: Generally reliable 2: Generally less reliable 3: Less reliable on some questions DStich=1 [Baseline sample] | (DStich=0 [Panel sample] & Proxy=0 [TP]) --- DStich=0 [Panel sample] & Proxy=2 [Proxy & TP]	 5a --- 5px
5px (P) (Px)	DStich=0 [Panel sample] & Proxy>0 [Proxy] **How would you rate the information supplied by proxy?** 1: Generally reliable 2: Generally less reliable 3: Less reliable on some questions DStich=0 [Panel sample] & Proxy=1 [nur Proxy] --- DStich=0 [Panel sample] & Proxy=2 [Proxy & TP]	 5apx --- 5a

5a (B/P) (ZP/Px)	DStich=1 [Baseline sample] | (DStich=0 [Panel sample] & Proxy=0 [TP]) | (DStich=0 [Panel sample] & Proxy=2 [Proxy & TP]) **How well does the respondent speak German?** 1: (Almost) not at all 2: A bit 3: well 4: Very well DStich=1 [Baseline sample]	(DStich=0 [Panel sample] & Proxy=0 [TP]) --- DStich=0 [Panel sample] & Proxy=2 [Proxy & TP]	5b --- 5apx
5apx (P) (Px)	DStich=0 [Panel sample] & Proxy>0 [Proxy] **How well does the proxy speak German?** 1: (Almost) not at all 2: A bit 3: well 4: Very well DStich=0 [Panel sample] & Proxy=1 [only Proxy] --- DStich=0 [Panel sample] & Proxy=2 [Proxy & TP]	5bpx --- 5b
5b (B/P) (ZP/Px)	DStich=1 [Baseline sample] | (DStich=0 [Panel sample] & Proxy=0 [TP]) | (DStich=0 [Panel sample] & Proxy=2 [Proxy & TP]) **How well does the respondent understand German?** 1: (Almost) not at all 2: A bit 3: well 4: Very well 1=A (Interview passed alone with respondent) --- 1≠A (Interview passed with respondent not alone) --- DStich=0 [Panel sample] & Proxy=2 [Proxy & TP]	6 --- 5c --- 5bpx
5bpx (P) (Px)	DStich=0 [Panel sample] & Proxy>0 [Proxy] **How well does the proxy understand German?** 1: (Almost) not at all 2: A bit 3: well 4: Very well	5c
5c (B/P) (ZP/Px)	1≠A [Interview was not filled with respondent alone] PROG: DStich=1 [Baseline sample]	(DStich=0 [Panel sample] & (Proxy=0 [TP] | Proxy=1 [nur Proxy])) **Was the interview translated by a third party?** PROG: DStich=0 [Panel sample] & (Proxy=2 [Proxy & TP]	

	Was the interview translated by the proxy? 1: Yes, (almost) completely 2: Yes, partly 3: No DStich=1 [Baseline sample] | (DStich=0 [Panel sample] & (Proxy=0 [TP] | Proxy=2 [Proxy & TP])) --- DStich=0 [Panel sample] & Proxy=1 [only Proxy]	6 --- 6px
6 (B/P) (ZP/Px)	DStich=1 [Baseline sample] | (DStich=0 [Panel sample] & Proxy=0 [TP]) | (DStich=0 [Panel sample] & Proxy=2 [Proxy & TP]) **The respondent had difficulty answering the following questions:** PROG: allow multiple choice. PROG: Code 12 (Answer M) not insert with other codes. INT: Multiple responses possible! [PROG: Proxy=0]A: Parental home, education / training, and first job B: Employment and Retirement C: Marital Status and Partner D: Child, Grandchild and Housing E: Participation and Leisure F: Health [PROG: Proxy=0]G: Pulmonary function test PROG: Proxy=0]H: Personal Network J: Social Support K: Financial Dealings and Standard of Living [PROG: Proxy=0]L: Digit-Symbol-Test M: No difficulties DStich=1 [Baseline sample] | (DStich=0 [Panel sample] & Proxy=0 [TP]) --- DStich=0 [Panel sample] & Proxy=2 [Proxy & TP]	9 --- 6px
6px (P) (Px)	DStich=0 [Panel sample] & Proxy>0 [Proxy] **The proxy had difficulty answering the following questions:** PROG: allow multiple choice. PROG: Code 12 (Answer M) not insert with other codes. INT: Multiple responses possible! B: Employment and Retirement C: Marital Status and Partner D: Child, Grandchild and Housing E: Participation and Leisure F: Health H: Personal Network K: Financial Dealings and Standard of Living M: No difficulties	

6apx (P) (Px)	DStich=0 [Panel sample] & Proxy>0 [Proxy] **In the proxy interview, the formulations oft he questions are aimed at the target person. How did the proxy cope with the questions from the perspective of the target person?** 1: Good 2: Average 3: Bad 4: Initially good, then worsened 5: Initially bad, then improved	
7px (P) (Px)	DStich=0 [Panel sample] & Proxy>0 [Proxy] **Do you have additional comments about the proxy interview, which you have not specified to this point?** 1: Yes --- 2: No	8px --- 9
8px (P) (Px)	**Please note your comments on the proxy interview.** PROG: Forced entry intended **open 500**	
7.	omitted	
8.	omitted	
9. (B/P) (ZP/Px)	**Where did interview take place?** 1: Interview took place in respondent‘s house/ apartment/room --- 2: Interview did not take place in respondent‘s house/apartment/room	10 --- 13
10. (B/P) (ZP/Px)	9=1 [Interview located in apartment/ room] **How is the house/apartment/room of the respondent accessible?** 1: without stairs 2: up to 10 steps in staircase 3: over 10 steps in staircase 8: Don‘t know	
11. (B/P) (ZP/Px)	9=1 [Interview located in apartment/ room] **Is there an elevator on site?** 1: Yes 2: No 8: Don‘t know	

12. (B/P) (ZP/Px) 12 a 12 b 12 c 12 d	9=1 [Interview located in apartment/ room] **How is your overall impression of house, apartment/room?** 1: bright 2: 3: 4: 5: gloomy 8: Don't know 1: cheap furniture 2: 3: 4: 5: expensive furniture 8: Don't know 1: well looked after 2: 3: 4: 5: neglected 8: Don't know 1: cramped 2: 3: 4: 5: spacious 8: Don't know	
13. (B/P) (ZP/Px)	**How do you evaluate the state of the building inhabited by the respondent?** 1: very well preserved 2: 3: 4: 5: dilapidated 8: Don't know	
14. (B/P) (ZP/Px)	**How do you evaluate the overall residential area?** 1: definitely upmarket 2: 3: 4: 5: very basic 8: Don't know	
15. (B/P) (ZP/Px)	**How is the residential area located?** 1:Single or scattered site, outlying district 2: Attached estate, outlying district 3: Peripheral location 4: Close to centre 5: Central location/inner city/city 8: Don't know	

16. (B/P)	**Is this a major city with at least 100.000 inhabitants?** 1: Yes --- 2: No --- 8: can't be matched	 18 --- 17 --- 18
17. (B/P) (ZP/Px)	16=2 [home in large city with mind 100.000 residents] **What's the distance to the centre of the nearest big town/city with at least 100.000 inhabitants?** distance in km: _ _ _ 998: Don't know	
18. (B/P) (ZP/Px)	**We reached the end of the interview!**	
	PROG: Timestamp	

2 DROP-OFF QUESTIONNAIRE

This is an additional questionnaire to be filled out by the respondents on their own. Alternatively, they could use an identical online version.

DZA | German Centre of Gerontology

The Second Half of Life
Attitudes and Living Conditions

infas

A survey commissioned by the Federal Ministry for Family Affairs, Senior Citizens, Women and Youth

Dear participant,

many thanks for taking part in our research work!
In the oral interview you answered our questions on various aspects of life. In this additional paper-and-pencil-questionnaire we would like to look into some selected aspects of your life in more detail.

You have the choice: You may fill out the questionnaire either online or in this paper version. Notes for filling out the questionnaire are to be found on the next page.

If you choose the online version you will be routed through the questionnaire automatically. Answering the online questionnaire is generally timesaving.

When you have filled out the online questionnaire completely, you may dispose this yellow paper version. You don‘t have to give it back to your interviewer or send it back to infas.

In order to fill out the questionnaire online, please enter the following link in your Internet browser:

www.infas-online.de/deas

Use your personal access code:

<Access code>

transferred from contact record:

Ser.No.: | | | | | | | | |

5413/HS/2017

What happens to your data...

The infas Institute for Applied Social Science and the German Centre of Gerontology are responsible for guaranteeing data protection. All data supplied by you will be treated with strict confidentiality. All data are evaluated exclusively in anonymous form, i. e., without name and address, and only in conjunction with the information supplied by other inter viewees. The results cannot be linked to the person who supplied the data. In other words, data protection is fully and comprehensively guaranteed.

General instructions...

– There are no right or wrong answers and no special knowledge is required to fill out the questionnaire. You should answer each question for yourself personally.

– Please note the comments on the various questions when completing the questionnaire.

How to fill out the online questionnaire...

– You will get to the online questionnaire by entering the Internet address
www.infas-online.de/deas
into the address line of your browser (e.g. Internet Explorer/Firefox/Safari).
Attention: Do not enter the link into the search box!

– After entering the access code (see front page) you will be automatically routed through the questionnaire.

– When opening the online questionnaire, additional hints for filling out are displayed for you.

– Personal details like your address, telephone number or email address are not necessary for answering the online questionnaire.

How to fill out the paper questionnaire...

– Please tick the selected response in the corresponding box.

– Please answer one question after the other in the order given.

– Place the completed questionnaire in the enclosed reply envelope. A member of our staff will pick it up at the scheduled time.

Many thanks for your help and we hope you enjoy completing the questionnaire!

infas Institute and the German Centre of Gerontology (DZA)

1. In the first part of this questionnaire, we're especially interested in your personal opinions. We want to know how you would evaluate yourself and certain experiences that you have been through.

Everybody gets older. But ageing can mean very different things to different people. The following statements relate to changes in the context of ageing.

Please indicate the extent to which you agree with each statement.

☞ *Please tick one box **per line**!*

	Strongly agree	**Agree**	**Disagree**	**Strongly disagree**
	1	2	3	4
Ageing means to me that I can still put my ideas into practice	☐	☐	☐	☐
Ageing means to me that my capabilities are increasing	☐	☐	☐	☐
Ageing means to me that I feel less respected	☐	☐	☐	☐
For me, getting older means that I am less healthy	☐	☐	☐	☐
Ageing means to me that I feel lonely more often	☐	☐	☐	☐
Ageing means to me that I have a better idea of what I want	☐	☐	☐	☐
Things keep getting worse as I get older	☐	☐	☐	☐
I have as much pep as I had last year	☐	☐	☐	☐
As you get older, you are less useful	☐	☐	☐	☐
As I get older, things are better than I thought they would be	☐	☐	☐	☐
I am as happy now as when I was younger	☐	☐	☐	☐

2. We now ask you to assess yourself with the aid of the following statement. Please indicate the extent to which you agree with each statement.

☞ *Please tick one box **per line**!*

	Strongly agree	Agree	Disagree	Strongly disagree
	1	2	3	4
On the whole, I am satisfied with myself	☐	☐	☐	☐
I am looking forward to the life ahead of me	☐	☐	☐	☐
I am able to to things as well as most other people	☐	☐	☐	☐
All in all, I am inclined to feel that I am a failure	☐	☐	☐	☐
For me the future is full of hope	☐	☐	☐	☐
I feel that I have a number of good qualities	☐	☐	☐	☐
It is easy for me to stick to my aims and accomplish my goals	☐	☐	☐	☐

3. The next statements relate to how you <u>assess your life as a whole</u>. Use the scale to indicate the extent to which you agree with each statement.

☞ *Please tick one box **per line**!*

	Strongly agree	Agree	Neighter agree nor disagree	Disagree	Strongly disagree
	1	2	3	4	5
In most ways my life is close to my ideal	☐	☐	☐	☐	☐
The conditions of my life are excellent	☐	☐	☐	☐	☐
I am satisfied with my life	☐	☐	☐	☐	☐
So far I have gotten the important things I want in life	☐	☐	☐	☐	☐
If I could live my life over, I would change almost nothing	☐	☐	☐	☐	☐

4. In the following you will find a number of words that describe different feelings and emotions.

Please indicate to what extent you have felt this way during <u>the past few months</u>.
Use the scale from 'very slightly or not at all' to 'extremely'.
If you are not quite sure about a particular feeling, choose the answer that most closely describes how often you have felt that way.

☞ *Please tick one box **per line**!*

	Very slightly or not at all	A little	Moderately	Quite a bit	Extremely
	1	2	3	4	5
Enthusiastic	☐	☐	☐	☐	☐
Distressed	☐	☐	☐	☐	☐
Excited	☐	☐	☐	☐	☐
Upset	☐	☐	☐	☐	☐
Strong	☐	☐	☐	☐	☐
Guilty	☐	☐	☐	☐	☐
Scared	☐	☐	☐	☐	☐
Hostile	☐	☐	☐	☐	☐
Interested	☐	☐	☐	☐	☐
Proud	☐	☐	☐	☐	☐
Irritable	☐	☐	☐	☐	☐
Alert	☐	☐	☐	☐	☐
Ashamed	☐	☐	☐	☐	☐
Inspired	☐	☐	☐	☐	☐
Nervous	☐	☐	☐	☐	☐
Determined	☐	☐	☐	☐	☐
Attentive	☐	☐	☐	☐	☐
Jittery	☐	☐	☐	☐	☐
Active	☐	☐	☐	☐	☐
Afraid	☐	☐	☐	☐	☐

5. In the <u>past twelve months</u>, have you been discriminated against due to your age or placed at a disadvantage in relation to others?
Can you tell us which area of life this occured in?

Yes, I have been discriminated against due to my age..... ☐ 1

No ..... 2 ☐ ***Please skip to question 6!***

namely:

☞ *Please tick **all** statements that apply!*

	1
At work or looking for work (for example, in hiring decisions, in the workplace itself, or in layoff/firing decisions)	☐
In dealing with government agencies (for example, in the processing of applications or in decisions on the provision of benefits).....	☐
In medical care (for example, medical diagnoses, treatments or prescriptions)	☐
In every day life (for example, when shopping, at events or in personel relationships).....	☐
In money matters (for example, in loan applications or other contracts)	☐
In other areas:.....	☐

↳ *(Please specify)* ☐

6. How strong is your interest in politics?

very strong ..... ☐ 1

strong ..... ☐ 2

average ..... ☐ 3

slight..... ☐ 4

not at all ..... ☐ 5

don‘t know..... ☐ 8

7. Many people in Germany lean towards a particular political party over the long term, even if they occasionally vote for a different party. What about you: Do you – generally speaking – lean towards one particular party?

☞ *Please tick only **one** box!*

Yes, the CDU ..... ☐ 1

Yes, the CSU..... ☐ 2

Yes, the SPD..... ☐ 3

Yes, the Alternative for Germany (AfD) ..... ☐ 4

Yes, the Green Party..... ☐ 5

Yes, the Linke..... ☐ 6

Yes, the FDP ..... ☐ 7

Yes, the Pirates..... ☐ 8

Yes, the NPD / Republicans..... ☐ 9

Yes, the Free Voters..... ☐ 10

Yes, another party..... ☐ 11

↳ Which party? *(Please specify)* ☐

— — — — — — — — — — —

No, I don‘t lean towards any party ..... ☐ 12

8. The following statements are about pension provision in Germany. Please indicate the extent to which you agree with each statement.

☞ *Please tick one box **per line**!*

	Agree completely (1)	Agree partly (2)	Neither agree nor disagree (3)	Dis-agree partly (4)	Disagree com-pletely (5)
Government pension provision should promote equality in income and living conditions among the elderly.	☐	☐	☐	☐	☐
Everyone should assume responsibility for for their own retirement.	☐	☐	☐	☐	☐
It‘s better to spend money today than to save, for retirement.	☐	☐	☐	☐	☐
It‘s unjust that people who earned a lot in their profession receive higher pensions.	☐	☐	☐	☐	☐
It‘s enough if the state pension covers people‘s basic needs.	☐	☐	☐	☐	☐
There‘s no sense in saving for retirement since you, don‘t know what the future will bring.	☐	☐	☐	☐	☐
People who were successful in their career should enjoy respect and prosperity in old age.	☐	☐	☐	☐	☐
People who are very wealthy should receive a, lower state pension.	☐	☐	☐	☐	☐
It‘s right that people with a higher income should receive higher pensions than others	☐	☐	☐	☐	☐

9. In the following we address your inclusion into society. To which extent do you agree to these statements?

☞ *Please tick one box **per line**!*

	Strongly agree (1)	Agree (2)	Disagree (3)	Strongly disagree (4)
I am worried to be left behind	☐	☐	☐	☐
I feel like I do not really belong to society	☐	☐	☐	☐
I feel that I am left out	☐	☐	☐	☐
I feel excluded from society	☐	☐	☐	☐

10. How often do you deal with the topic death and dying?

Never ..... ☐ 1

Seldom ..... ☐ 2

Sometimes ..... ☐ 3

Often ..... ☐ 4

Very often ..... ☐ 5

11. What religious group do you belong to?

The Roman Catholic Church ..... ☐ 1

The Protestant Church (not including Free Churches) ..... ☐ 2

An Evangelical Free Church ..... ☐ 3

The Islamic religious community ..... ☐ 4

The Jewish religious community ..... ☐ 5

Another religious communnity ..... ☐ 6

↳ that is: *(Please specify)* ☐

— — — — — — — — — — — — — —

No religious group ..... ☐ 7

12. How often do you usually go to church (or the mosque, synagogue) or to another religious assembly (or service)?

Several times a week ..... ☐ 1

Once a week ..... ☐ 2

1-3 times per month ..... ☐ 3

Several times a year ..... ☐ 4

Less often ..... ☐ 5

Never ..... ☐ 6

13. The next statements deal with your estimation of yourself and your life.

Please indicate the extent to which you agree with each statement.
We would like to ask you to rate yourself using the following sentences.

☞ *Please tick one box **per line**!*

	Strongly agree	**Agree**	**Disagree**	**Strongly disagree**
	1	2	3	4
Thinking about my future makes me worry.	☐	☐	☐	☐
I certainly feel useless at times.	☐	☐	☐	☐
I can usually handle whatever comes my way.	☐	☐	☐	☐
I feel that I'm a person of worth at least on an equal plane with others.	☐	☐	☐	☐
I feel I do not have much to be proud of.	☐	☐	☐	☐
I take a positive attitude toward myself.	☐	☐	☐	☐
I can solve most problems if I invest the necessary effort.	☐	☐	☐	☐

14. Now let us return to your <u>image of ageing</u>:
We now refer to changes that affect your life in general.
Please indicate the extent to which you agree with each statement.

☞ *Please tick one box **per line**!*

	Stronly agree	**Agree**	**Disagree**	**Strongly disagree**
	1	2	3	4
Ageing means to me that I can deal with my physical weaknesses better.	☐	☐	☐	☐
Ageing means to me that I continue to make plans.	☐	☐	☐	☐
Ageing means to me that I cannot take as much on as before.	☐	☐	☐	☐
Ageing means to me that I feel less needed.	☐	☐	☐	☐
Ageing means to me that I can still learn new things.	☐	☐	☐	☐
Ageing means to me that I am bored more often.	☐	☐	☐	☐
Ageing means to me that I cannot make up for my physical losses.	☐	☐	☐	☐
Ageing means to me that I know myself better.	☐	☐	☐	☐
Ageing means to me that I am less energetic and fit.	☐	☐	☐	☐
Ageing means to me that I am more relaxed about a lot of things.	☐	☐	☐	☐

15. What age do you think you will live to?

☐☐☐ years

16. You must have heard people say that they would like to be younger or older than they actually are. If you imagine that you could choose your age: How old would you like to be now?

☞ *Please enter your ideal age!*

I would now like to be ☐☐☐ years old.

17. Starting at what age would you describe someone as old?

Starting at the age of ☐☐

18. The following statements relate to your life at present and in the future. Please indicate the extent to which you agree with each statement.

☞ *Please tick one box **per line**!*

	Stongly agree (1)	**Agree** (2)	**Disagree** (3)	**Strongly disagree** (4)
I look to the future with confidence.	☐	☐	☐	☐
I wish I could have more respect for myself.	☐	☐	☐	☐
There are lots of ways around any problem.	☐	☐	☐	☐
When I am confronted with a problem, I can usually find several solutions.	☐	☐	☐	☐
At times I think I am no good at all.	☐	☐	☐	☐
The future holds a lot of good in store for me.	☐	☐	☐	☐

19. In the following you find terms that describe feelings of people. Please state how you felt in the last months. Therefore please use the graduation from 'very slightly or not at all' to 'extremely'. If you are not sure about a feeling, please choose the answer which comes as close as possible to your estimation.

☞ *Please tick one box **per line**!*

	Very slightly or not at all	A little	Moderately-	Quite a bit	Extremely
	1	2	3	4	5
Satisfied	☐	☐	☐	☐	☐
Sad	☐	☐	☐	☐	☐
Downhearted	☐	☐	☐	☐	☐
Relaxed	☐	☐	☐	☐	☐
Disappointed	☐	☐	☐	☐	☐
Well-balanced	☐	☐	☐	☐	☐
Exhausted	☐	☐	☐	☐	☐

20. We now want to know something about your usage of media in daily life.

Do you usually spend watching television on an average weekday?
Please include also TV programmes on the Internet (for example in media libraries, streaming services) and videos or DVD.

Yes ..... ☐ 1 ↓

No ..... 2 ☐ ➡ ***Please go on to question 21!***

If yes, please indicate, how many hours in total you spend watching television on an average weekday.

☞ *Please round off to full hours!*

About ☐☐ hours

21. How often do you read a newspaper in digital or printed form?

Daily ..... ☐ 1

Several times a week ..... ☐ 2

Once a week ..... ☐ 3

1 - 3 times a month ..... ☐ 4

Less often ..... ☐ 5

Never ..... ☐ 6

22. On an average weekday, do you usually listen to the radio or Internet radio?

Yes ..... ☐ 1 ↓ No ..... 2 ☐→ ***Please go on to question 23!***

If yes, please indicate, how many hours in total you listen to the radio or Internet radio on an average weekday.

☞ *Please round off to full hours!*

About ☐☐ hours

23. Have you read books or e-books in your spare time over the past 12 months?

Yes ..... ☐ 1 ↓ No ..... 2 ☐→ ***Please go on to question 24!***

If yes, please indicate, how many books or e-books you have read over the past 12 months.

About ☐☐☐ books

24. Do you have access to the Internet?

No ..... ☐ 1 → ***Please go on to question 26!***

Yes, at home ..... ☐

Yes, at work..... ☐

25. How often do you use the Internet for the following purposes?

☞ *Please tick one box **per line**!*

	Daily	Several times a week	Less often	Once a week	1 to 3 times a month	Never
	1	2	3	4	5	6
Contact with friends and, relatives (e. g. e-mail, facebook, chat, video telephony like Skype) ...	☐	☐	☐	☐	☐	☐
Search for new social contacts (e.g. friends, partner, like-minded persons).....	☐	☐	☐	☐	☐	☐
Search for information (e.g. news, advisers, Wikipedia)	☐	☐	☐	☐	☐	☐
Banking business (e.g. online-Banking).....	☐	☐	☐	☐	☐	☐
Entertainment (e. g. listening to music, watching films, playing games, watching TV).....	☐	☐	☐	☐	☐	☐
Shopping (e.g. amazon, eBay, online pharmacy)	☐	☐	☐	☐	☐	☐
Create own contents (e. g. texts, photos, music, uploading videos for blogs, websites, online selling).....	☐	☐	☐	☐	☐	☐

26. The following relates to relationship with other people.
Please indicate for each of the statements the extent to which they apply to your situation, the way you feel now.

☞ *Please tick one box **per line**!*

	Strongly agree	Agree	Disagree	Strongly disagree
	1	2	3	4
I miss having people around among which I feel comfortable.	☐	☐	☐	☐
There are plenty of people I can rely on when I have problems.	☐	☐	☐	☐
I often feel rejected.	☐	☐	☐	☐
There are many people I can trust completely.	☐	☐	☐	☐
I miss emotional security and warmth.	☐	☐	☐	☐
There are enough people I feel close to.	☐	☐	☐	☐

27. The following questions concern how often you felt burdened induced by stress <u>during the past month.</u>

☞ *Please tick one box **per line**!*

	Never	Seldom	Some-times	Often	Very often
	1	2	3	4	5
In the last month, how often have you felt that you were unable to control the important things in your life?	☐	☐	☐	☐	☐
In the last month, how often have you felt confident about your ability to handle your personal problems?	☐	☐	☐	☐	☐
In the last month, how often have you felt that things were going your way?	☐	☐	☐	☐	☐
In the last month, how often have you felt difficulties were pilling up so high that you could not overcome them?	☐	☐	☐	☐	☐

28. We would now like to talk about your <u>state of health</u>:
Which of the following illnesses and health problems do you have, and how severe are your symptoms at present?

Please indicate whether you have the illness or health problem in question, and then the extent to which you are having symptoms of this disorder at present.

☞ *Please answer **each line**!*

	I have...		Current symptoms			
	No	Yes	none	mild	moderate	severe
Cardiac and circulatory disorders	2 ☐	1 ☐ →	1 ☐	2 ☐	3 ☐	4 ☐
Bad circulation	☐	☐ →	☐	☐	☐	☐
Joint, bone, spinal or back problems	☐	☐ →	☐	☐	☐	☐
Respiratory problems, asthma, shortness of breath	☐	☐ →	☐	☐	☐	☐
Stomach and intestinal problems	☐	☐ →	☐	☐	☐	☐
Cancer	☐	☐ →	☐	☐	☐	☐
Diabetes	☐	☐ →	☐	☐	☐	☐
Gall bladder, liver or kidney problems	☐	☐ →	☐	☐	☐	☐
Bladder problems	☐	☐ →	☐	☐	☐	☐
Insomnia	☐	☐ →	☐	☐	☐	☐
Eye problems, vision impairment	☐	☐ →	☐	☐	☐	☐
Ear problems, hearing problems	☐	☐ →	☐	☐	☐	☐
Other illnesses or health problems: *(please specify)* ☐	☐	☐ →	☐	☐	☐	☐
☐	☐	☐ →	☐	☐	☐	☐

29. During the last month, how often did you have difficulty falling asleep because you couldn‘t get to sleep within 30 minutes?

Not during the last month ..... ☐ 1

Less than once a week ..... ☐ 2

Once or twice a week..... ☐ 3

3 or more times a week..... ☐ 4

30. During the last month, how often did you have difficulty with your sleep because you woke up during the night or early in the morning?

Not during the last month ..... ☐ 1

Less than once a week ..... ☐ 2

Once or twice a week..... ☐ 3

3 or more times a week..... ☐ 4

31. During the last month, how would you rate your sleep quality overall?

Very good ..... ☐ 1

Good ..... ☐ 2

Fairly bad ..... ☐ 3

Very bad ..... ☐ 4

32. Did you visit one of the following doctors <u>in the past twelve months</u>?
If yes, please state how often. Please include house calls.
Collecting prescription is not considered as a visit.

☞ *Please tick one box **per line**!*

	No	Yes	How often?
	2	1	
General practitioner	☐	☐ →	ca. ☐☐☐ times
Specialist	☐	☐ →	ca. ☐☐☐ times
Dentist	☐	☐ →	ca. ☐☐☐ times

33. Doctors often recommend vaccinations and various types of health screening.
<u>In the past years</u>, did you regularly…

☞ *Please tick one box **per line**!*

	Yes	No
	1	2
get a flu vaccination?	☐	☐
undergo early cancer screening?	☐	☐
have a health check-up?	☐	☐

34. <u>In future</u>, do you plan to regularly…

☞ *Please tick one box **per line**!*

	Yes	No
	1	2
get a flu vaccination?	☐	☐
undergo early cancer screening?	☐	☐
have a health check-up?	☐	☐

35. Do you use one or more of the following aids and appliances?

☞ *Please tick one box **per line**!*

	Yes	No
	1	2
Glasses, contact lens	☐	☐
Hearing aid/s	☐	☐
Cane / Walking aid	☐	☐
Wheeled walker, rollator, 3 wheel walker	☐	☐
Wheel chair	☐	☐

36. The following questions concern unintentionally toppling and falling.

☞ *Please tick one box **per line**!*

	Yes (1)	No (2)
Have you fallen in the past twelve months?	☐	☐
In the past twelve months, have you been worried or afraid that you might fall?	☐	☐
Do you ever limit your activities, for example, what you do or where you go, because you are afraid of falling?	☐	☐

37. Have you made one or several of the following written powers of attorney or decrees?

☞ *Please tick one box **per line**!*

	Yes (1)	No (2)	Don't know, what this is (8)
Precautionary power of attorney	☐	☐	☐
Living will	☐	☐	☐
Stipulations on future care	☐	☐	☐

38. How much do you drink per day? Please think of all non-alcoholic liquids that you normally consume (e.g. water, tea, juice, coffee, lemonade, milk). How many glasses or cups of non-alcoholic liquids do you drink per day?

☞ *One glass or one cup is equivalent to ca. 200 ml.*

- Less than three glasses (less than 0.6 l) ..... ☐ 1
- 3 to 5 glasses (0.6 – 1.0 l)..... ☐ 2
- 6 to 9 glasses (1.2 – 1.8 l)..... ☐ 3
- 10 and more glasses (2.0 l and more) ..... ☐ 4

39. How often do you have a drink containing alcohol (e.g. beer, wine, sparkling wine, spirits, long drinks)?

- Daily ..... ☐ 1
- Several times a week..... ☐ 2
- Once a week..... ☐ 3
- 1 to 3 times a month ..... ☐ 4
- Less often ..... ☐ 5
- Never ..... ☐ 6

40. Do you currently smoke – even if it‘s only occasionally?

Yes, daily ..... ☐ 1
Yes, occasionally ..... ☐ 2
No, not any more ..... ☐ 3
I have never smoked ..... ☐ 4

41. How often do you do <u>strenuous physical activities</u>? What is meant here are activities that require great physical efforts and whereby you <u>breathe more heavily than normal</u>, e.g. carrying heavy loads, arduous gardening, aerobic or fast cycling.

Please include <u>all strenuous physical</u> activities, those within your work, in the household and in the garden, in order to get from one place to another and in your spare time.

Daily ..... 1 ☐
Several times a week ..... 2 ☐
Once a week ..... 3 ☐
→ Total approx. time per week: ☐☐ hours ☐☐ minutes
1 to 3 times a month ..... 4 ☐
Less often ..... 5 ☐
Never ..... 6 ☐

42. How often do you do <u>moderate physical activities</u>? What is meant here are activities that require moderate physical efforts whereby you <u>breathe a bit more heavily than normal</u>, e.g. carrying light loads, easy gardening, hiking, swimming or cycling with normal speed.

Please include <u>all moderate physical</u> activities, those within your work, in the household and in the garden, in order to get from one place to another and in your spare time.

Please <u>do not</u> include walks.

Daily ..... 1 ☐
Several times a week ..... 2 ☐
Once a week ..... 3 ☐
→ Total approx. time per week: ☐☐ hours ☐☐ minutes
1 to 3 times a month ..... 4 ☐
Less often ..... 5 ☐
Never ..... 6 ☐

43. How often do you do light physical activities? What is meant here are activities that require little physical efforts whereby you don‘t breathe more heavily than normal, e.g. walking around at home, walks from one place to another as well as walks that you do for relaxation, as sport, as training or just for pleasure.

Daily ..... 1 ☐
Several times a week ..... 2 ☐
Once a week ..... 3 ☐
→ Total approx. time per week: ☐☐ hours ☐☐ minutes

1 to 3 times a month ..... 4 ☐
Less often ..... 5 ☐
Never ..... 6 ☐

44. Please think of your daily life when you answer the following questions.

☞ *Please tick one box **per line**!*

	Strongly agree 1	**Agree** 2	**Disagree** 3	**Strongly disagree** 4
In my daily life, I get along well on my own.	☐	☐	☐	☐
I make my own decisions and don‘t allow others to protect me.	☐	☐	☐	☐
I organize my life according to my own ideas.	☐	☐	☐	☐
I cope with my daily life without outside help.	☐	☐	☐	☐

45. How would you describe your sexual orientation?

Heterosexual ..... ☐ 1
Homosexual ..... ☐ 2
Bisexual ..... ☐ 3
Other ..... ☐ 4

46. How do you think you could get help from persons in your social environment in difficult situation?
Please state to which extent the following statements apply to you.

☞ *Please tick one box **per line**!*

	Strongly agree	Agree	Disagree	Strongly disagree
	1	2	3	4
When I am unsure about a decision, there is someone who can give me advise.	☐	☐	☐	☐
When I feel bad, there is someone who gives me love and affection.	☐	☐	☐	☐
If I were away for a while I know someone who would look after my apartment.	☐	☐	☐	☐
When I worry about something, there is someone I can count on to listen.	☐	☐	☐	☐
If I were sick, I know someone who would do important things for me.	☐	☐	☐	☐
If I have a problem, there is someone who can tell me how to handle it.	☐	☐	☐	☐
If I were in financial trouble, I know someone who would loan me money.	☐	☐	☐	☐

47. In the following, we would like to ask you some questions about your goals and desires. How do you try to reach what you want?

☞ *Please tick one box **per line**!*

	Strongly agree	Agree	Disagree	Strongly disagree
	1	2	3	4
I do everything I can to realize my plans.	☐	☐	☐	☐
I have set my goals clearly and stick to them.	☐	☐	☐	☐
When it becomes harder for me to get the same results, I keep trying harder until I ca do it as well as before.	☐	☐	☐	☐
When I can‘t do something important the way I did before, I look for a new goal.	☐	☐	☐	☐

48. Now to another topic. The following questions deal with your living situation and your financial situation.

Have you or your spouse/ partner ever received an inheritance? Please do not overlook smaller bequests.

Yes ..... 1 ☐ ↓ No ..... 2 ☐ → ***Please go to question 51!***

49. Who did you receive the inheritance from?

☞ *Please tick **all** people from whom you have received an inheritance!*

1

My parents. ..... ☐

Parents of spouse/partner ..... ☐

My grandparents ..... ☐

Grandparents of spouse/partner ..... ☐

Spouse/partner ..... ☐

Brothers or sisters ..... ☐

Others: *(please specify)* ..... ☐

↳ ☐

50. If you add it all together, what would be the approximate value of these inheritance today?

Less than 2,500 EUR ..... ☐ 1

2,500 and more, but less than 12,500 EUR ..... ☐ 2

12,500 and more, but less than 50,000 EUR ..... ☐ 3

50,000 and more, but less than 250,000 EUR .... ☐ 4

250,000 and more, but less than 500,000 EUR .. ☐ 5

500,000 EUR or more ..... ☐ 6

51. Do you or your spouse/ partner own a house, appartment or land?

Yes .....1 ☐ No .....2 ☐

☞ *Please tick **everything** that applies!*

	1
Detached house, row house, semi-detached house	☐
Multi-family home	☐
Apartment	☐
Vacation home or apartment	☐
Other property	☐

52. Do you or your spouse/ partner have any debts to pay off as a result of acquiring property?

Yes .....1 ☐ No .....2 ☐

the amount involved is:

Less than 2,500 EUR	☐1
2,500 and more, but less than 12,500 EUR	☐2
12,500 and more, but less than 50,000 EUR	☐3
50,000 and more, but less than 250,000 EUR	☐4
250,000 and more, but less than 500,000 EUR	☐5
500,000 EUR or more	☐6

53. Now we would like to ask a few questions about your living situation. How is your home equipped?

☞ *Please tick **everything** that is part of your home!*

	1
Central heating	☐
Balcony or terrace	☐
Yard or use of shared yard	☐

54. We would like to ask some more questions, which relate to your home furnishings.

☞ *Please tick one box **per line**!*

	Yes (1)	No (2)
The apartment or house is accessible without steps.	☐	☐
All stairs, inside the home, in the stairwell or access to the house, have a handrail on both sides.	☐	☐
All rooms have no doorsills or these are so low (less than 2 cm) that they can be easily overcome with a walking frame or wheelchair.	☐	☐
The door of the bathroom is so wide that you also come through with crutches or a walking frame (minimum 80 cm).	☐	☐
The door of the bathroom is an outward opening door.	☐	☐
Inside the apartment or house all rooms are accessible without steps.	☐	☐
A bathtub does exist.	☐	☐
A shower does exist,…		
…at that on grade (or a threshold of up to 2 cm).	☐	☐
…at that with a higher threshold or shower tray.	☐	☐
There is an emergency call system.	☐	☐
There is a stair lift.	☐	☐

55. Do you have pets?

Yes, I have pets.....1 ☐ ↓ No, I don‘t have any pets. ..... 2 ☐

in fact:

☞ *Please tick **everything** that is applicable!*

	1
Cat/s	☐
Dog/s	☐
Other pet/s	☐

56. If you thing of your home and living environment, which of the following statements would apply to you?

☞ *Please tick one box **per line**!*

	Strongly agree (1)	Agree (2)	Disagree (3)	Strongly disagree (4)
My home holds many memories for me.	☐	☐	☐	☐
I do not feel safe on the streets after dark.	☐	☐	☐	☐
There are enough shopping facilities in the vicinity.	☐	☐	☐	☐
There are not enough doctors an pharmacies in the vicinity.	☐	☐	☐	☐
I am attached to the neighbourhood.	☐	☐	☐	☐
There is a lot of noise pollution in my neighbourhood.	☐	☐	☐	☐
There are good public transport services in my neighbourhood.	☐	☐	☐	☐

57. Do you have plans <u>for the future</u> with regard to your living situation?

☞ *Please tick one box **per line**!*

In the future I plan to ...	Yes (1)	No (2)
...move to another rental apartment.	☐	☐
...move to my own home.	☐	☐
...move into a private shared apartment or shared house.	☐	☐
...move in with one of my children.	☐	☐
...expand/remodel my apartment/home.	☐	☐
...move into a barrier-free apartment designed for elderly.	☐	☐
...move into a residential complex that offers assisted living.	☐	☐
...move into a nursing or retirement home.	☐	☐
Do something else:	☐	☐

↳ ☐

58. How close is your contact to your neighbours?

☞ *Please tick **one** box only!*

Very close ..... ☐ 1

Close ..... ☐ 2

Not really close ..... ☐ 3

Only rare ..... ☐ 4

No contact ..... ☐ 5

59. How many of your neighbours could you ask for a little favour, for example a ‚cup of sugar'?

☞ *Please state the number of **neighbours**!*

☐☐ neighbours

60. And to which extent is the following applicable to you?

☞ *Please tick one box **per line**!*

	Strongly agree	Agree	Disagree	Strongly disagree
	1	2	3	4
I realise what happens in the neighbourhood.	☐	☐	☐	☐
I talk with neighbours about what happens in the neighbourhood.	☐	☐	☐	☐
To a certain extent, I am able to determine what happens in the neighbourhood.	☐	☐	☐	☐

61. We would like to ask another question about your financial situation. Do you have enough money to meet your needs?

Not at all ..... ☐ 1

Barely ..... ☐ 2

To some extent ..... ☐ 3

More or less ..... ☐ 4

Completely ..... ☐ 5

62. Do you or your spouse/partner have any of the types of assets or valuables listed below? Geldanlagen oder über Wertgegenstände?

☞ *Please tick one box **per line**!*

	Yes (1)	No (2)
Bank accounts, checking accounts or saving accounts	☐	☐
Fixed-interest securities	☐	☐
Shares	☐	☐
Shares in investment funds (equality funds, money market funds, property funds, mixed funds, etc.)	☐	☐
Building loan agreements	☐	☐
Term life insurance	☐	☐
Capital life insurance	☐	☐
Other private pension plans	☐	☐
Valuables	☐	☐
I (we) have assets, but I don‘t know which ones	☐	☐

☞ *If you have answered **all** questions with **„No“**:*
Please go to question 65!
Otherwise to question 63!

63. For several years now, the government has been providing tax breaks or allowances to people who put away money for retirement (for example, through the „Riester-Rente“ pension scheme). Is one of your investments part of a state-sponsored pension scheme?

Yes ..... ☐ 1

No ..... ☐ 2

Don‘t know ..... ☐ 8

64. When you think of all your assets, that is, savings accounts, building contracts, life insurance, bonds, and valuables belonging to you or your spouse/partner, <u>with the exception of real estate</u>: What does it all amount to roughly?

Less than 500 EUR ..... ☐ 1

500 and more, but less than 2,500 EUR ..... ☐ 2

2,500 and more, but less than 5,000 EUR ..... ☐ 3

5,000 and more, but less than 12,500 EUR ..... ☐ 4

12,500 and more, but less than 25,000 EUR ..... ☐ 5

25,000 and more, but less than 50,000 EUR ..... ☐ 6

50,000 and more, but less than 100,000 EUR .... ☐ 7

100,000 and more, but less than 250,000 EUR .. ☐ 8

250,000 and more, but less than 500,000 EUR .. ☐ 9

500,000 EUR or more ..... ☐ 10

— — — — — — — — — — —

I (We) have no assets. ..... ☐ 11

65. Have you or your spouse/partner put money aside regularly or irregularly <u>over the past 12 months</u>? If so, for what purpose?

Yes ..... 1 ☐ ↓ No ..... 2 ☐ → ***Please go to question 66!***

for:

☞ *Please tick **everything** that applies!* 1

Things we want to buy ..... ☐

Old age ..... ☐

Family ..... ☐

Another purpose: *(Please specify)* ..... ☐

↳ ☐

☞ *If you have put money aside:*

How much would you estimate that it was roughly if you add up <u>over the past 12 months</u> (amount only in EUR without any cents)?

☐☐☐☐☐☐ EUR

66. Have you or your spouse/partner had to fall back on your savings or assets over the past 12 months?
If so, for what purpose?

Yes .....1 ☐ → No ..... 2 ☐ ***Please go to question 67!***

namely:

☞ *Please tick **everything** that applies!*

	1
For normal everyday things	☐
For special purchases.....	☐
For the apartment / house	☐
For vacations	☐
To support family members.....	☐
For another purpose: *(Please specify)*.....	☐

↳ ☐

☞ *If you have fallen back on savings or assets:*

What would be your rough estimate of how much it added up to in all over the past 12 months (amount only in EUR without any cents)?

☐☐☐☐☐☐ EUR

67. Apart from mortgages: do you or your spouse/partner have any debts at the moment from loans, i.e., from a bank or savings bank, store or mail order company, or a private individual?
If so, what is the amount?

Yes .....1 ☐ → No ..... 2 ☐ ***Please go to question 68!***

If you have any debts:
What is the amount approximately?

Less than 500 EUR.....	☐1
500 and more, but less than 2,500 EUR.....	☐2
2,500 and more, but less than 5,000 EUR.....	☐3
5,000 and more, but lesss than 12,500 EUR.....	☐4
12,500 and more, but less than 25,000 EUR.....	☐5
25,000 and more, but less than 50,000 EUR.....	☐6
50,000 and more, but less than 100,000 EUR....	☐7
100,000 and more, but less than 250,000 EUR..	☐8
250,000 and more, but less than 500,000 EUR..	☐9
500,000 EUR or more	☐10

68. What income do you and your spouse/partner receive? (only if you live together as a couple)?

☞ *Please check this list for yourself and, if applicable, for your spouse/partner. first tick the income types that apply, and then give the amount of these types of income in EUR per month (no cent amounts).*
Please give net amounts in each case, that is, income after deduction of all taxes and social security contributions.

If you can't remember the various amounts exactly, please consult your records. Please tick the relevant types of income even if you can't state the exact sum.

We would like to take this opportunity to repeat explicitly that your data - as all other information provided in this interview – will of course remain completely anomyous, meaning that the data cannot be traced bach either to you or to your household.

	You yourself			**Your spouse/partner** *(only if you live together with a spouse/partner)*		
	No 2	**Yes** 1	**EUR per month**	**No** 2	**Yes** 1	**EUR per month**
Income from own employment	☐	☐ →		☐	☐ →	
Pension, retirement, widow's or survivor's pension, invalidity or occupational disability pension	☐	☐ →		☐	☐ →	
Company pension or supplementary benefits for former public sector employees	☐	☐ →		☐	☐ →	
Early retirement or other benefits paid by employer	☐	☐ →		☐	☐ →	
Unemployment Benefit I (ALG I), Short-time Working Benefit	☐	☐ →		☐	☐ →	
Sick pay from health insurance	☐	☐ →		☐	☐ →	

69. Do any other people live in your household apart from you and your spouse/partner?

Yes .....1 ☐ ➡ No .....2 ☐ ➡ ***Please go to question 70!***

What kind of income do these other members of your household receive? Please read the following list and tick each relevant income type.

☞ *Please tick **everything** that applies!*

	Other household members
	1
Income from own employment	☐
Pension, retirement, widow‘s or survivor‘s pension, invalidity or occupational disability pension	☐
Company pension or supplementary benefits for former public sector employees	☐
Early retirement or other benefits paid by employer	☐
Unemployment Benefit I, (ALG I), Short-time Working Benefit	☐
Sick pay from health insurance	☐

70. And which of the following income types do <u>you or your household</u> also receive? Please read the following list. Tick the relevant types of income and also enter the monthly amount in EUR (no Euro-Cent amounts).

	Other income of your household		
	No	**Yes**	**EUR per month**
	2	1	
Income from rental and leases, interest and income from capital assets	☐	☐ ➡	
Regular income from a private life insurance policy or private provision schemes	☐	☐ ➡	
Unemployment Benefit II („Hartz IV“) including social benefit and child benefit	☐	☐ ➡	
Basic retirement or supplemental security income for those with reduced earning capacity	☐	☐ ➡	
Welfare, such as coverage of living expenses or assistance in special circumstances	☐	☐ ➡	
Benefits from long-term care insurance ☞ *Please include if you or another member of the household is in need of care!*	☐	☐ ➡	
Other state benefits such as child-raising allowance/parents, money, housing benefit/expenses, grants for education or training	☐	☐ ➡	
Other income not listed: *(please specify)*	☐	☐ ➡	

↳ ☐

71. Thank you for your cooperation. We hope that you enjoyed answering these questions.

Do you have any comments or suggestions on the questionnaire or the individual questions? Perhaps we have overlooked a question that you think is particularly important. We would very much welcome your suggestions.

Please note your comments in the space below:

72. And finally please enter:

My age: ..... ☐☐☐ years

My sex: male ..... ☐1

female ..... ☐2

Date:

Today is ☐☐.☐☐.2017

73. Did you fill out the questionnaire alone or did someone help you?

Yes, I filled it out alone ..... ☐1

No, someone helped me ..... ☐2

Who helped you to fill it out?

The interviewer ..... ☐1

Someone else ..... ☐2

Thank you for your patience and valuable help with our study!
Please put the completed questionnaire in the enclosed self-addressed envelope.
A member of our staff will pick it up at the scheduled time.

3 SHORT QUESTIONNAIRE FOR NON-RESPONDENTS

If there is personal contact to the respondents' household but target persons are not able to or decline to be interviewed and no proxy interview could be conducted target persons are asked to give at least some basic information on their living situation, health status and well-being. Some questions can be answered by a proxy person.

infas

Short questionnaire

serial no.: transferred from contact protocol:

Do not fail to complete if the interview did not take place!

1. May I ask you a few questions? You would help us to estimate, which persons don‘t participate in our study. It will take about three minutes.

☞ *Is the person that will complete the short questionnaire the respondent?*

Yes, respondent..... 1 ☐→ ***Please complete the back page only!***

No, not the respondent, other person..... 2 ☐

↓ ***Please complete the following questions only!***

Questions to contact person

2. In which country was <*name respondent*> born?

In Germany, including former eastern territories .. ☐ 1

In another country ..... ☐ 2

Answer declined/ don‘t know..... ☐ 5

3. How many years did <*name respondent*> attend school?

(circa) ☐☐ years

No school attendance..... ☐ 94

Answer declined/ don‘t know..... ☐ 95

4. Is <*name respondent*> currently (self-)employed?

Yes..... ☐ 1

No, in retirement..... ☐ 2

No, other reasons..... ☐ 3

Answer declined/ don‘t know..... ☐ 5

5. What‘s <*name respondent*>‘s civil status?

Married ..... ☐ 1

Divorced ..... ☐ 2

Widowed..... ☐ 3

Unmarried..... ☐ 4

Answer declined/ don‘t know..... ☐ 5

6. Has <*name respondent*> currently a companion?

Yes..... ☐ 1

No..... ☐ 2

Answer declined/ don‘t know..... ☐ 5

7. Does <*name respondent*> have any health impair-ments that hinders him/her in carrying out daily chores, i.e. around the home?

Yes..... ☐ 1

No..... ☐ 2

Answer declined/ don‘t know..... ☐ 5

9. How well does <*name respondent*> <u>speak</u> german?

(Almost) not at all ..... ☐ 1

A bit ..... ☐ 2

Good..... ☐ 3

Very good ..... ☐ 4

Answer declined/ don‘t know..... ☐ 5

10. How well does <*name respondent*> <u>understand</u> german?

(Almost) not at all ..... ☐ 1

A bit ..... ☐ 2

Good..... ☐ 3

Very good ..... ☐ 4

Many thanks for answering these questions!

Questions to respondent

2. In which country were you born?

In Germany, including former eastern territories .. ☐ 1
In another country ..... ☐ 2
Answer declined/ don‘t know..... ☐ 5

3. For how many years did you attend school?

(Circa) ☐☐ years
No school attendance..... ☐ 94
Answer declined/ don‘t know..... ☐ 95

4. Are you currently (self-)employed?

Yes..... ☐ 1
No, in retirement..... ☐ 2
No, other reasons..... ☐ 3
Answer declined/ don‘t know..... ☐ 5

5. What‘s your civil status?

Married ..... ☐ 1
Divorced ..... ☐ 2
Widowed..... ☐ 3
Unmarried..... ☐ 4
Answer declined/ don‘t know..... ☐ 5

6. Do you currently have a companion?

Yes..... ☐ 1
No..... ☐ 2
Answer declined/ don‘t know..... ☐ 5

7. Do you have any health impairments that hinder you in carrying out daily chores, i.e. around the home?

Yes..... ☐ 1
No..... ☐ 2
Answer declined/ don‘t know..... ☐ 5

8. To finish off, I would now like to ask you to assess some key areas of life.

Generally speaking…

...how would you rate your current job situation or situation of your life in retirement?

very good	good	average	bad	very bad	no answer
1	2	3	4	5	95
☐	☐	☐	☐	☐	☐

...how would you rate your current relationship to your family?

very good	good	average	bad	very bad	no answer
1	2	3	4	5	95
☐	☐	☐	☐	☐	☐

...how would you rate your current state of health?

very good	good	average	bad	very bad	no answer
1	2	3	4	5	95
☐	☐	☐	☐	☐	☐

...how would you rate your current standard of living?

very good	good	average	bad	very bad	no answer
1 2	3	4	5	95	
☐	☐	☐	☐	☐	☐

...how would you rate your current housing situation?

very good	good	average	bad	very bad	no answer
1	2	3	4	5	95
☐	☐	☐	☐	☐	☐

Many thanks for answering these questions!

☞ ***From here on to fill in without respondent:***

9. How well does the respondent <u>speak</u> german?

(Almost) not at all ..... ☐ 1
A bit ..... ☐ 2
Good..... ☐ 3
Very good ..... ☐ 4
Don‘t know..... ☐ 8

10. How well does the respondent <u>understand</u> german?

(Almost) not at all ..... ☐ 1
A bit ..... ☐ 2
Good..... ☐ 3
Very good ..... ☐ 4
☐ 8

4 OCCUPATIONAL STATUS CARD

This card shows an often used classification of occupational status in Germany.
Respondents are asked to select the appropriate code of their first, current or last occupation as well as the occupation of their present or former partner.

Occupational Status

Please give the general category number (10, 20 . . .) only when unable to name the precise category!

10 Self-employed farmers and members of farmers cooperatives

11 Self-employed farmers with less than 10 hectares of fields in agricultural use

12 Self-employed farmers with between 10 and 50 hectares of fields in agricultural use

13 Self-employed farmers with 50 and more hectares of fields in agricultural use

14 Members of a farmers cooperative

20 Academic/scientific freelance professionals (e.g. medical doctors or lawyers with their own practice

21 Alone or 1 employee

22 2 to 9 employees

23 10 or more employees

25 Family members helping out in the family

30 Self-employed persons in sales, trade, industry and services as well as craft cooperative members, self-employed craftsmen and businessmen, as well as other non-academic/scientific freelance professional occupations

31 Alone or 1 employee

32 2 to 9 employees

33 10 to 49 employees

34 50 employees and more

35 Member of a producers cooperative

36 Other, non-academic/scientific freelance professional occupations

40 Civil servants

41 Low-level Civil Service (with “Volksschulabschluss” or “POS / 8th grade” as highest level of completed schooling)

42 Middle-level Civil Service (with “Mittlere Reife” or “POS / 10th grade” as highest level of completed schooling)

43 High-level Civil Service (with “Abitur” or “EOS diploma” as highest level of completed schooling**)**

44 Executive Civil Service (with higher education)

50 Employee in the provision services, administration, sales, transport, industry, health care services, education, members of the milittary (“Bundeswehr”, NVA or armed forces of other countries) **and the police** (if not employed in the civil service)

51 White-collar workers with simple tasks (e.g. salesperson, office worker, typist)

52 Qualified professionals (e.g. case officer, acountant, technical draftsman)

53 High qualified professionals (e.g. research assistant, doctor, teacher, chief accountant, area supervidor, department head)

54 Managerial (e.g. director, sole manager, chief executive, officer, mayor)

55 Industrial or plant foreman

60 Workers

61 Untrained workers
62 Semi-trained workers
63 Trained workers
64 Assistant foreman, team leaders, brigade leaders
65 Foreman

5 CARDS WITH PERSONAL CODES

There are many questions in which the respondent refers to other people. With the help of these two cards with personal codes it is easier for the interviewer to fill in the answers to the electronic questionnaire. Every person to which the respondent refers gets a three digit personal code. This makes sure that there are no confusions in names or persons and to comply with data protection rules.

☐☐☐☐☐☐☐☐ Ser.No

Person Card I

Family	
101 Grandfather/-mother of the respondent or of his/her spouse **102** Mother **103** Father **104** Mother-in-law / Partner's mother **105** Father-in-law / Partner's father **106** Spouse/Partner **107** Daughter-in-law / Son's partner **108** Son-in-law / Daughter's partner **111** Brother-in-law / Partner's brother **112** Sister-in-law / Partner's sister **120** Ex-Partner	**Children** **201** 1. Child _____ **202** 2. Child _____ **203** 3. Child _____ **204** 4. Child _____ **205** 5. Child _____ **206** 6. Child _____ **207** 7. Child _____ **208** 8. Child _____ **209** Other Child
Other relatives **401** Aunt **402** Uncle **403** Cousin (male) **404** Cousin (female) **405** Niece **406** Nephew **407** Other relatives	**Siblings** **451** Brother **452** Sister

Other non-relative persons
501 Friend 1 _____ **502** Friend 2 _____ **503** Friend 3 _____ **504** Friend 4 _____ **505** Friend 5 _____ **506** Other Friends
601 Colleagues **602** Neighbours **603** Members of the association/ organisation
701 **Volunteers**, for example from welfare services **702** **Paid helpers**
801 **Acquaintances**
Other Persons *(please note):* **901** _____ **902** _____ **903** _____ **904** _____ **905** _____

□□□□□□□□ Ser.No

Person Card II

Grandchildren		
301 1. Grandchild_____	**311** 11. Grandchild_____	**321** 21. Grandchild_____
302 2. Grandchild_____	**312** 12. Grandchild_____	**322** 22. Grandchild_____
303 3. Grandchild_____	**313** 13. Grandchild_____	**323** 23. Grandchild_____
304 4. Grandchild_____	**314** 14. Grandchild_____	**324** 24. Grandchild_____
305 5. Grandchild_____	**315** 15. Grandchild_____	**325** 25. Grandchild_____
306 6. Grandchild_____	**316** 16. Grandchild_____	**326** 26. Grandchild_____
307 7. Grandchild_____	**317** 17. Grandchild_____	**327** 27. Grandchild_____
308 8. Grandchild_____	**318** 18. Grandchild_____	**328** 28. Grandchild_____
309 9. Grandchild_____	**319** 19. Grandchild_____	**329** 29. Grandchild_____
310 10. Grandchild_____	**320** 20. Grandchild_____	**330** 30. Grandchild_____

6 ANSWER OPTIONS (EXCERPT)

This excerpt contains all lists of answer options which are not shown on the CAPI template. The number of each list corresponds with the question number.

A **less than 150 EUR**

B **150 to less than 400 EUR**

C **400 to less than 500 EUR**

D **500 to less than 750 EUR**

E **750 to less than 1,000 EUR**

F **1,000 to less than 1,250 EUR**

G **1,250 to less than 1,500 EUR**

H **1,500 to less than 1,750 EUR**

J **1,750 to less than 2,000 EUR**

K **2,000 to less than 2,250 EUR**

L **2,250 to less than 2,500 EUR**

M **2,500 to less than 2,750 EUR**

N **2,750 to less than 3,000 EUR**

O **3,000 to less than 3,250 EUR**

List 803

P 3,250 to less than 3,500 EUR

Q 3,500 to less than 3,750 EUR

R 3,750 to less than 4,000 EUR

S 4,000 to less than 4,500 EUR

T 4,500 to less than 5,000 EUR

U 5,000 to less than 5,500 EUR

V 5,500 to less than 6,000 EUR

W 6,000 to less than 7,500 EUR

X 7,500 to less than 10,000 EUR

Y 10,000 to less than 20,000 EUR

Z 20,000 EUR or more

List 803

7 DIGIT-SYMBOL TEST

This is the test sheet to be filled in by the respondents. The digit-symbol test measures aspects of cognitive ability. Details on how to do the test can be found on question no. 901 in the CAPI template.

From contact protocol:

serial no: | | | | | | | | |

1	2	3	4	5	6	7	8	9
=	–	⊥	⊐	∟	⊔	O	∧	X

example digits						
8	9	7	3	8	6	2

8	9	7	8	9	6	8	7	5	8	7	9	6	5	4	7	9	6

9	5	6	8	3	4	7	5	3	8	2	5	6	4	7	3	8	2	9	1	5	2	6	3	7

4	8	5	9	1	8	2	7	3	6	4	5	1	6	2	7	3	8	4	9	5	6	4	7	3

1	8	2	9	3	1	6	4	2	5	1	3	9	2	5	8	1	6	2	4	7	3	1	2	4

8 PULMONARY FUNCTION TEST

The following excerpt of the handbook for interviewers describes how to conduct the pulmonary function test. This test was carried out during the personal interview after having completed the health questions (see question no. 561 in the CAPI template).

Question 561: Pulmonary function test with peak flow meter

The execution of the pulmonary function test

At the end of the thematic section health, a pulmonary function test is conducted with the enclosed peak flow meter:

Important: Please clean the peak flow meter before the first and approximately after every tenth usage as follows:

Put the peak flow meter into warm (but not hot) water for about 2 to 3 (with a maximum of 5) minutes and add some mild cleaning agent. Move the device to achieve an in-depth lavation. Rinse the device with warm and clear water und shake it carefully to remove the water. Dry the device thoroughly before using it in the next interview.

Besides the regular cleaning, the top piece for attaching the one-way mouthpiece has to be cleaned with a disinfectant wipe before every usage.

Please conduct the test accurately with the help of the instructions given below – provided the target person's health status allows it and the person agrees with the test. The instructions are also shown on your screen. Only if the test is conducted exactly as described in this instruction, accurate and feasible findings are guaranteed. On the next pages you will find images illustrating the handling of the peak flow meter.

Interviewer instruction:

Hold the device for the pulmonary function test in position (with the attachment used to demonstrate the test, the wrapped mouthpiece and the disinfectant wipe contained in the package).

Explanation for the target person:

Before continuing with the interview, we would like to conduct a brief test. This next test measures how fast you can exhale air out of your lungs.

It is important that you blow as quickly and forcefully as you can.

I would like you to do this test twice. When we're ready to start, I will ask you to stand up. Breathe in as deeply as you can.

Open your mouth and close your lips tightly around the mouthpiece. Then blow into the mouthpiece as quickly and forcefully as you can, like this...

Interviewer instruction:

Demonstrate the test, then remove the demonstration attachment and use the disinfectant wipe to clean the tool where it was attached. Hand the instrument and a disposable mouthpiece to the participant. Let the participant unpack the mouthpiece and attach it firmly to the device him- or herself. The participant should hold the device gently in one hand so that the opening does not point to the participant's hand. This prevents that the fingers block the opening.

Explanation for the target person:

Please stand up. Breathe in as deeply as you can. Open your mouth and close your lips tightly around the mouthpiece.

Now blow into the mouthpiece as quickly and forcefully as you can.

Interviewer instruction:

Please note the result according to the requirements in the questionnaire. If the test was conducted successfully, it will be carried out a second time.

Explanation for the target person:

Please reset the value to zero and repeat the test.

Interviewer instruction:

There should be a break of 30 seconds between the tests.

Explanation for the target person:

Please blow into the mouthpiece again as quickly and forcefully as you can.

Peak flow meter: tool to measure the pulmonary function

Pictured here is the peak flow meter in the middle, at the top is the conic mouthpiece for demonstration and at the bottom is the cylindric one-way mouthpiece.

The next picture shows the peak flow meter with the attached mouthpiece for demonstration.

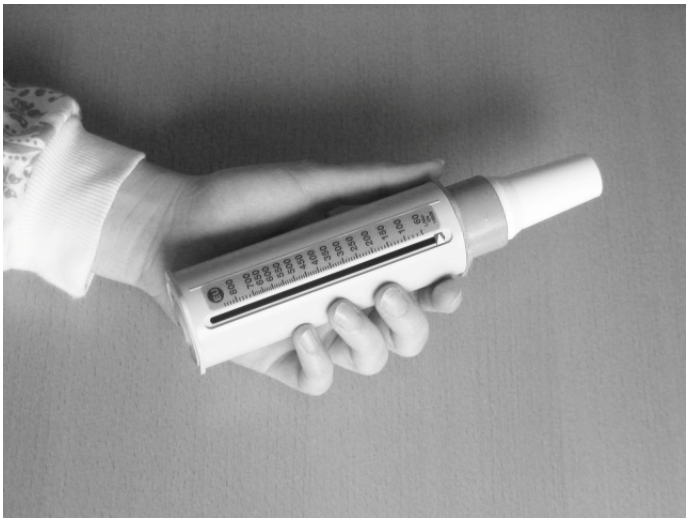

This mouthpiece is only for you, not for the target person. Please use this plastic mouthpiece to demonstrate the pulmonary function measurement. Afterwards you remove it.

Hand over the peak flow meter and the wrapped one-way mouthpiece to the target person and **let the person unpack it him- or herself.**

The target person should attach the cylindric one-way mouthpiece like this:

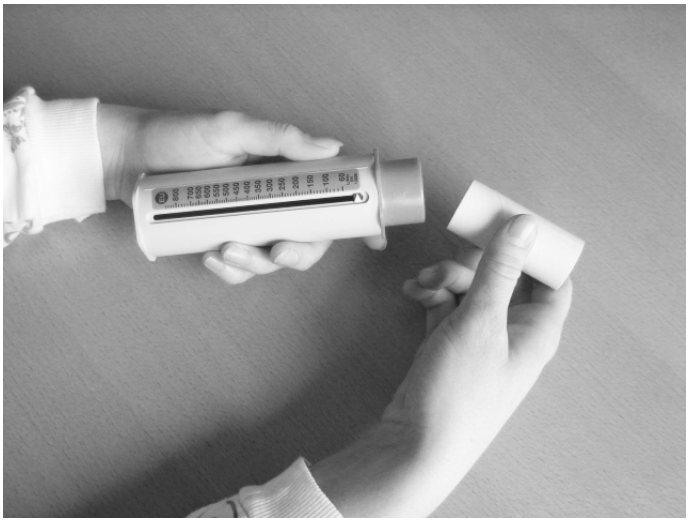

Attention:
Never attach the one-way mouthpiece on the mouthpiece used for demonstration!

Please remember: Always take off your mouthpiece used for demonstration before you hand over the peak flow meter and the wrapped one-way mouthpiece to the target person.

The next picture shows the correct handling of the instrument for the measurement of the pulmonary function during the test (with one-way mouthpiece):

Important:

- **The scale and the slot of the peak flow meter should not be covered with the fingers!**
- **The measurement should be conducted while the person is standing.**
- **The peak flow meter should be held in a horizontal position.**

How do you explain the result to the target person?

If the target person wants to know how to evaluate her or his personal value, please explain that the pulmonary function cannot directly be identified by this one value. It is calculated with the help of a complex formula that takes height, weight, sex and especially the individual process of the pulmonary function over time into account. As an interviewer, you, do not know the calculation. The general practitioner will provide a professional evaluation, if the target person conducts the same test there.

9 SYNOPSES OF CAPI MODULES

- Synopsis 1: Employment and transition to retirement
- Synopsis 2: Marital status and partnership
- Synopsis 3: Grandchildren
- Synopsis 4: Memberships and volunteering
- Synopsis 5: Serious health events
- Synopsis 6: Support due to severe health impairments
- Synopsis 7: Personal network

Respondents who ever have been employed or self-employed	Respondent under 60 years & 60+ years old, who do not receive a pension from own employment												60+ years of age and own pension	
	Question 101: current employment situation												Question 102: current employment	
	01	02	12	03	04	05	06	07	08	09	10	11	1	2
	not employed										employed		pensioner with employment	pensioner without employment
	early/semi-retirement	unemployed without 1-Euro-Job	unemployed with 1-Euro-Job	paid semiretirement	early retired with disability pension	early pensioning	retraining	maternity/ childcare leave	hometaker	other reason	part-time, full-time employed	irregularly or marginally employed		
start of current status	ic169	ic165	ic165	ic163	ic172	ic172							ic104	ic104
pension with deduction													ic105b-d	ic105b-d
pension for persons especially long paying fees													ic105e	ic105e
Last status before retirement													ic106	ic106
start of last status before retirement													ic106a	ic106a
burden due to transition to retirement													ic110	ic110
supplementary employment (extra money)	ic169a	ic166a	ic166a		ic172a	ic172a							ic102	ic102
reasons for employment during retirement													ic103b	
professional change since last survey											ic131a	ic131a		
occupational status (code): current											ic131	ic131		
managerial position: current											ic131b	ic131b		
employed or self-employed: current													ic102a	
professional activity: current											ic132	ic132	ic102b	
occupation: current											ic132a	ic132a	ic102c	
ISCO-Code of occupation: current											ic132isco	ic132isco	ic102isco	
same employer as before retirement?													ic102d	
regularity of occupation													ic102e	
months per year													ic102f	
sector											ic134	ic134		
size of place of work/company											ic135	ic135		
workload/work burden											ic148_1-4	ic148_1-4		
security of employment											ic149-151	ic149-151		
further training											ic152-157	ic152-157		
required qualification for job											ic157a-b	ic157a-b		
working hours per week											ic137	ic137	ic102g	
reasons for part-time												ic138		
semi-retirement with partial wage compensation: current											ic139-141	ic139-141		
desire for early retirement											ic142-144a	ic142-144a		
intended age of ending employment											ic146	ic146		
registration of unemployment at Bundesagentur für Arbeit		ic166												
start 1-Euro-Job			ic166a1											
Intention to go back to (principal/main) employment	ic169b	ic167	ic167		ic172b	ic172b	ic173	ic173	ic173	ic173				ic103
job seeking efforts	ic169c	ic167a	ic167a		ic172c	ic172c	ic173a	ic173a	ic173a	ic173a				ic103a
problems with finding a job		ic168	ic168				ic174	ic174	ic174	ic174				
end of principal/main employment	ic175	ic175	ic175	ic175	ic175	ic175	ic175	ic175	ic175	ic175			ic113	ic113
occupational status (code): former	ic176	ic176	ic176	ic176	ic176	ic176	ic176	ic176	ic176	ic176			ic114	ic114
managerial position: former	ic176a	ic176a	ic176a	ic176a	ic176a	ic176a	ic176a	ic176a	ic176a	ic176a			ic114a	ic114a
professional activity: former	ic177	ic177	ic177	ic177	ic177	ic177	ic177	ic177	ic177	ic177			ic115	ic115
occupation: former	ic177a	ic177a	ic177a	ic177a	ic177a	ic177a	ic177a	ic177a	ic177a	ic177a			ic115a	ic115a
sector: former	ic178	ic178	ic178	ic178	ic178	ic178	ic178	ic178	ic178	ic178			ic116	ic116
size of place of work/company: former	ic179	ic179	ic179	ic179	ic179	ic179	ic179	ic179	ic179	ic179			ic117	ic117
working hours per week: former	ic180	ic180	ic180	ic180	ic180	ic180	ic180	ic180	ic180	ic180			ic118	ic118
semi-retirment with partial wage compensation: former													ic120-122	ic120-122
intended start of retirement after semi-retirement				ic164										
reasons for ending (main/principal) employment	ic182	ic182	ic182	ic182	ic182	ic182	ic182	ic182	ic182	ic182			ic124	ic124
years of employment	ic183	ic183	ic183	ic183	ic183	ic183	ic183	ic183	ic183	ic183	ic145	ic145	ic123	ic123
company pension, supplementary pension (public service)	ic184	ic184	ic184	ic184	ic184	ic184	ic184	ic184	ic184	ic184	ic136	ic136	ic125	ic125
assessment: Starting age of early retirement	ic170													
assessment: currennt professional situation	ic185	ic185	ic185	ic185	ic185	ic185	ic185	ic185	ic185	ic185	ic158	ic158		
Satisfaction with different aspects of current job											ic147_1-7	ic147_1-7		
assessment: development of professional situation	ic186	ic186	ic186	ic186	ic186	ic186	ic186	ic186	ic186	ic186	ic159	ic159		
assessment: professional situation in future	ic187	ic187	ic187	ic187	ic187	ic187	ic187	ic187	ic187	ic187	ic160	ic160		
assessment: change of live after retirement	ic189	ic189	ic189	ic189	ic189	ic189	ic189	ic189	ic189	ic189	ic162	ic162	ic129	ic129

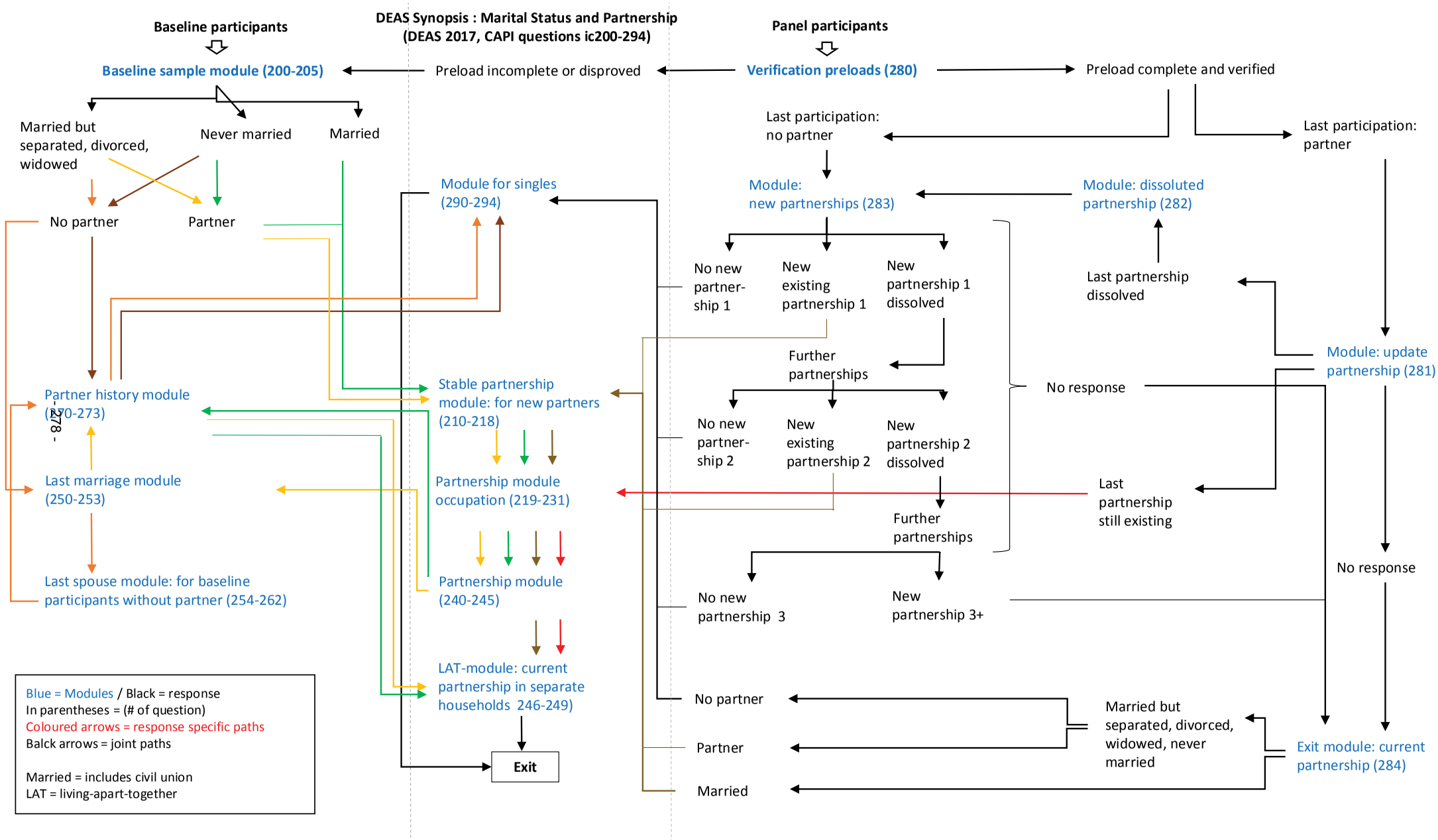
DEAS Synopsis : Marital Status and Partnership
(DEAS 2017, CAPI questions ic200-294)
Baseline participants
Panel participants
Baseline sample module (200-205)
Preload incomplete or disproved
Verification preloads (280)
Preload complete and verified
Married but separated, divorced, widowed
Never married
Married
Last participation: no partner
Last participation: partner
Module for singles (290-294)
Module: new partnerships (283)
Module: dissoluted partnership (282)
No partner
Partner
No new partner-ship 1
New existing partnership 1
New partnership 1 dissolved
Last partnership dissolved
Further partnerships
Module: update partnership (281)
Partner history module (270-273)
Stable partnership module: for new partners (210-218)
No response
No new partner-ship 2
New existing partnership 2
New partnership 2 dissolved
Last partnership still existing
Last marriage module (250-253)
Partnership module occupation (219-231)
Further partnerships
No response
Last spouse module: for baseline participants without partner (254-262)
Partnership module (240-245)
No new partnership 3
New partnership 3+
LAT-module: current partnership in separate households 246-249)
No partner
Partner
Married
Married but separated, divorced, widowed, never married
Exit module: current partnership (284)
Exit
Blue = Modules / Black = response
In parentheses = (# of question)
Coloured arrows = response specific paths
Balck arrows = joint paths
Married = includes civil union
LAT = living-apart-together
- 278 -

DEAS Synopsis: Collected Features for Grandchildren (2008ff.)

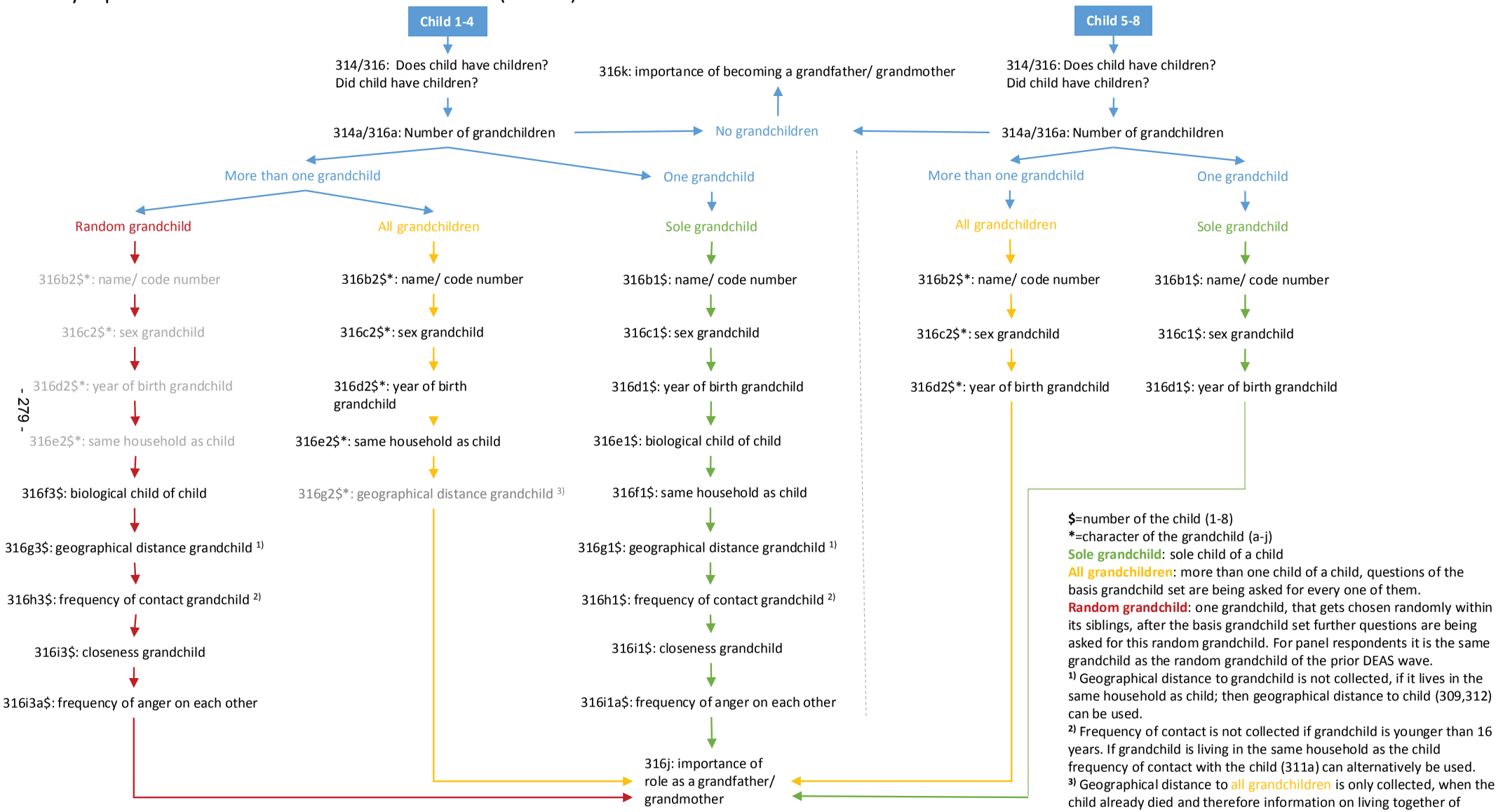

$=number of the child (1-8)
***=character of the grandchild (a-j)
Sole grandchild: sole child of a child
All grandchildren: more than one child of a child, questions of the basis grandchild set are being asked for every one of them.
Random grandchild: one grandchild, that gets chosen randomly within its siblings, after the basis grandchild set further questions are being asked for this random grandchild. For panel respondents it is the same grandchild as the random grandchild of the prior DEAS wave.

1) Geographical distance to grandchild is not collected, if it lives in the same household as child; then geographical distance to child (309,312) can be used.

2) Frequency of contact is not collected if grandchild is younger than 16 years. If grandchild is living in the same household as the child frequency of contact with the child (311a) can alternatively be used.

3) Geographical distance to all grandchildren is only collected, when the child already died and therefore information on living together of grandchild and child is not collected.

DEAS Synopsis:
Collected features of memberships and functions in groups/organizations and volunteering elsewhere (CAPI questions 404-415, 416)

	Only respondents aged 50+ (404ff.)	**All respondents (410ff.)**
Listing of possible groups/organisations (multiple responses possible)		
Member of group/organisation	ic404, ic405	ic410, ic411
	A Early retiree groups, groups to prepare for retirement	A Self-help group
	B Senior support groups, senior citizen cooperatives	B Citizens' initiative
	C Groups for volunteer work and aid	C Charitable organization
	D Senior citizen projects run by political parties or unions, senior citizen delegations and advisory boards	D Volunteer fire department
	E Senior citizen programs at universities and academies, continuing education programs	E Hobby and collectors' clubs
	F Company senior citizen groups	F Social club
	G Senior leisure complexes, senior centers	G Sports club
	H Other senior groups	H Refugee or displaced person' organization
		J Union
		K Businesses or professional association
		L Political party
		M Church or religious group
		N Folk society or civic association
		O Cultural association
		P Music and dance group
		Q Other
Characteristics of each membership		
Membership since when?	ic406	ic412
Number of attended meetings (past 12 months)	ic407	ic413
Holding an office or volunteer position?	ic408	ic414
Volunteer position: since when?	ic408a	ic414a
Hours volunteering in this position	ic409	ic415
Volunteering outside of organizations		
Other volunteering position (e.g. parent representative, member of works council, representative to a neighbourhood assistance group, lay judge)		ic416
Volunteering regularly in this position?		ic416a
Hours volunteering in this position		ic416b

DEAS Synopsis: Information on Serious Health Events (DEAS 2017, CAPI questions no. 513ff.)

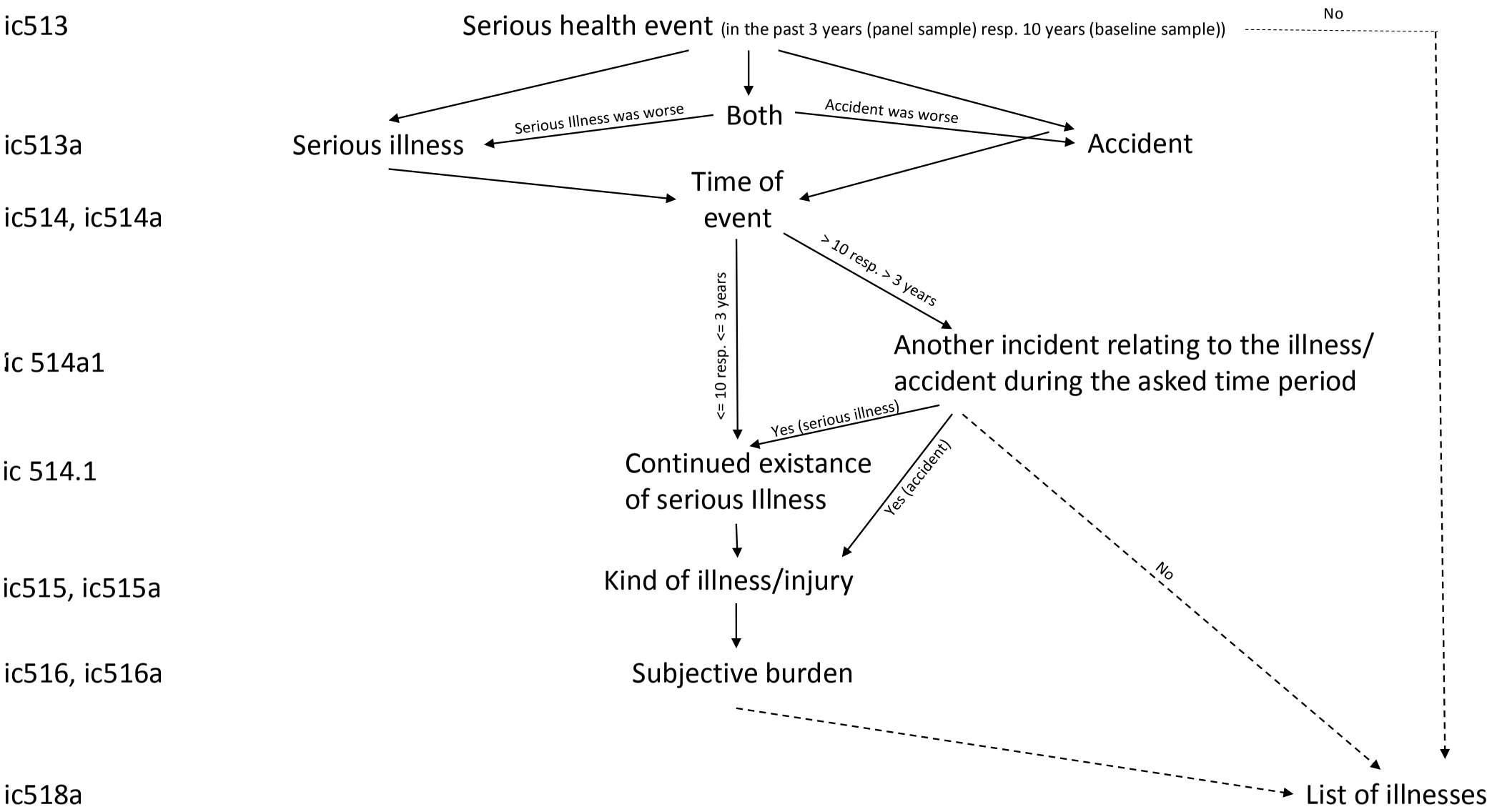

DEAS Synopsis: Support due to severe health impairments (DEAS 2017, CAPI questions no. 523ff.)

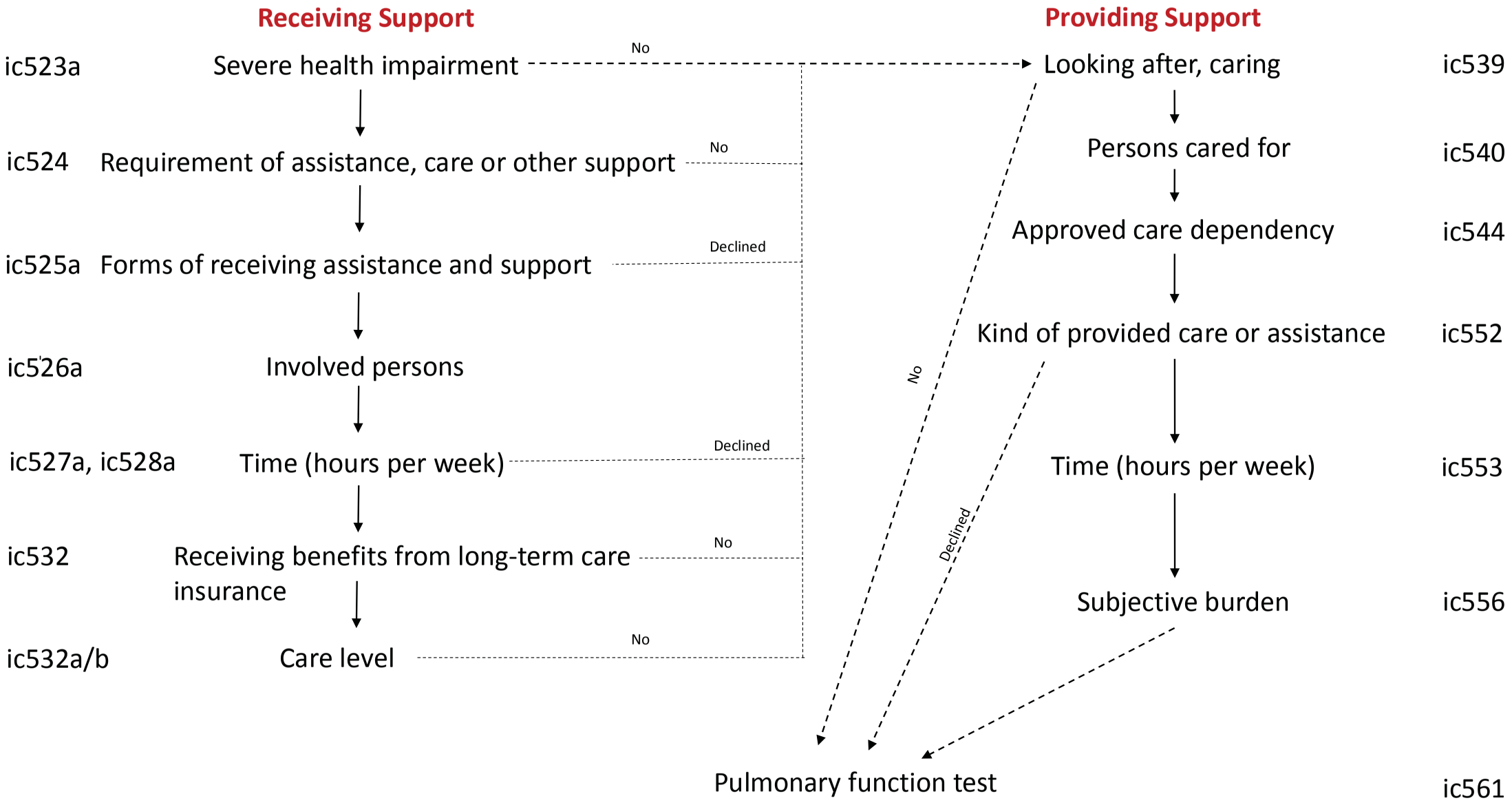

DEAS Synopsis : Collected features on members of the personal network (DEAS 2017, CAPI questions no. 600 - 606)
(respondents' listing of persons (max. 8) who are important to them and maintain regular contact with)

Questions (depending on the kind of network person)		**ic600a**	**ic600aa**	**ic601**	**ic602**	**ic603**	**ic604**	**ic604a**	**ic605**	**ic606**
		Name*	Sex	Code	Contact	Distance	Closeness	Anger	Age	Years of knowing
Kind of network person	**Reason (not) to ask**	**Identification**			**Descriptors**					
All network persons	To identify listed network person	yes	yes	yes						
Children 1-4	Information available from children's bio (q. ic300ff.)				no	no	no	no	no	no
Children 5-8	Information partly available from children's bio (q. ic300ff.)				yes	yes	yes	yes	no	no
Current spouse/ partner	Information available from partner bio (q. ic200ff.)				no	no	no	no	no	yes
Grandchild	Information partly available from grandchildren's bio (q. ic300ff.)				yes	no	yes	yes	no	yes
All other network persons					yes	yes	yes	yes	yes	yes
Proxy interview	No subjective ratings	yes	yes	yes	yes	yes	no	no	no	no

*) The final dataset does not contain any names.